کالای صنعتی صفایی

Technical Catalogue

CONTENTS

Page No.

- **GAMAK**.....3
- **PRODUCTS OVERVIEW**.....4
- **PRODUCT CODE**.....5
- **STANDARD INDUCTION MOTORS**.....6
  - **Standards and Recommendations**.....7
  - **Mechanical Design**

Frames, end-shields and flanges.....8
Enclosure degrees of protection.....8
Cooling.....9
Terminal box.....9
Cable entry.....9
Bearings.....10
Standard design with single row deep groove ball bearings...10
- Arrangement of bearings.....10
Cylindrical roller bearings.....11
- Arrangement of bearings.....11
Maintenance of bearings.....11
Permissible mechanical forces.....11
Permissible radial loads.....12
- Standard design with single row deep groove ball bearing...12
- Reinforced design with cylindrical roller bearing.....12
Permissible external axial loads.....13
- Standard design with single row deep groove ball bearing...13
- Reinforced design with cylindrical roller bearing.....14
Shaft extension.....15
Vibration.....15
Noise level.....15
Painting.....15
Storage.....15
Type of construction and mounting arrangements.....16

- **Electrical design**

Voltage and Frequency.....17
Rated output.....18
Over-load capacity.....18
Rated torque.....18
Insulation class.....18
Duty types-1.....19
Duty types-2.....20
Starting frequency.....21
- Permissible starting frequency per hour at no-load.....21

Page No.

Starting time.....22
- Permissible starting time (s) at direct-on-line starting...22
Terminal connections and starting of motors.....23
* Direct-on-line starting.....23
* Star/Delta (Y/Δ) starting.....23
* Soft starting.....23
Electrical protection of motors.....23
Tolerances.....23
- Efficiency Regulations.....24
- **Ratings and Performance**

IE2 High efficiency motors
2 pole, 3000 min^{-1} - Aluminium housing.....25
2 pole, 3000 min^{-1} - Cast iron housing.....26
4 pole, 1500 min^{-1} - Aluminium housing.....27
4 pole, 1500 min^{-1} - Cast iron housing.....28
6 pole, 1000 min^{-1} - Aluminium&Cast iron housing.....29
8 pole, 750 min^{-1} - Aluminium&Cast iron housing.....30
IE3 Premium Efficiency
2 pole, 3000 min^{-1} - Aluminium&Cast iron housing.....31
4 pole, 1500 min^{-1} - Aluminium&Cast iron housing.....32
6 pole, 1000 min^{-1} - Aluminium&Cast iron housing.....33

- **MULTI SPEED MOTORS**.....34

Ratings and Performance
1500/3000 min^{-1}, Constant torque applic. - Dahl. connection...35
750/1500 min^{-1}, Constant torque applic. - Dahl. connection...36
1000/1500 min^{-1}, Constant torque applic. - 2 sep. windings.....37
500/1500 min^{-1}, Constant torque applic. - 2 sep. windings.....38
1500/3000 min^{-1}, Variable torque applic. - Dahl. connection...39
750/1500 min^{-1}, Variable torque applic. - Dahl. connection...40
1000/1500 min^{-1}, Variable torque applic. - 2 sep. windings.....41

- **DIMENSIONS**.....42

Foot mounted motors:
Aluminium housing.....43
Cast iron housing.....44
D-Flange mounted motors:
Flange Form A, DIN EN 50 347 - Aluminium housing.....45
Flange Form A, DIN EN 50 347 - Cast iron housing.....46
Foot and D-Flange mounted motors:
Flange Form A, DIN EN 50 347 - Aluminium housing.....47

Page No.

Flange Form A, DIN EN 50 347 - Cast iron housing 48
C-Flange mounted motors:
Flange Form C, DIN EN 50 347 - Aluminium housing 49
Flange Form C, DIN EN 50 347 - Cast iron housin 50
Foot and C-Flange mounted motors:
Flange Form C, DIN EN 50 347 - Aluminium housing 51
Flange Form C, DIN EN 50 347 - Cast iron housing 52
• SPARES 53
• MODULAR ELIT SERIES MOTORS 54
New Design modular elit series motors 55
Housing, bearing, end-shields and flanges.....55
• Elit Series - Ratings and performance 56
IE3 - Premium Efficiency Motors
2,4 and 6 pole, - Aluminium Housing.....56
2,4 and 6 pole, - Cast Iron Housing 57
IE2 - High efficiency motors
2,4 and 6 pole, - Aluminium Housing.....58
2,4 and 6 pole, - Cast Iron Housing 59
• Elit Series - Dimensions 60
Foot Mounted Motors:
Foot mounted (B3) Aluminium and Cast Iron Housing 60
Flanged mounted motors:
Flanged (Form A-B5) Aluminium and Cast Iron Housing 61
Foot and Flanged (Form A-B35) Aluminium and Cast Iron Housing ..62
Flanged (Biçim C-B14) Aluminium and Cast Iron Housing ...63
Foot and Flanged (Form A-B34) Aluminium and Cast Iron Housing ..64
ELIT SERIES SPARES 65
• FREQUENCY CONVERTER.....66
Speed Control of A.C. Cage Induction Motors.....66
Operation of an A.C. induction motor below and above its rated speed.....67
Encoder integration.....67
Forced ventilation.....68
Shaft voltages.....69
• SINGLE PHASE MOTORS.....70
• Single phase totally enclosed (IP 55) cage induction motors...71
Permanent split capacitor motors.....71
Capacitor start/Capacitor run motors.....71
Mechanical design.....72
Permissible mechanical forces.....73
Permissible external axial loads.....73
Electrical design.....74

We reserve the right to alter or delete, fully or partly the technical specifications given in this brochure without prior notice.

Page No.

• Ratings and Performance
Permanent split capacitor motors.....75
Capacitor start/Capacitor run motors.....76
• Dimensions
Foot mounted motors.....77
D-Flange mounted motors-Flange Form A.....77
Foot and D-Flange mounted motors-Flange Form A.....77
C-Flange mounted motors-Flange Form C.....78
Foot and C-Flange mounted motors-Flange Form C.....78
Spares.....79
• Shaded pole motors.....80
Dimensions.....81
• DEFINITE PURPOSE MOTORS.....82
• Brake motors.....83
Standard brake motors.....84
Low torque brake motors.....84
• Smoke extraction motors.....85
Ratings and performance- F300 - IE2
2 pole motors.....86
4 pole motors.....87
6 pole motors.....87
4/2 and 8/4 pole motors, Variable torque applications 88
6/4 pole motors, Variable torque applications.....89
Dimensions.....90
• Marine motors.....91
• Special Application Motors.....92
• MISCELLANEOUS.....93
• Belt pulleys.....94
• Efficiency and Power Factor.....95
• Installation and Operation.....96
- Transport, ventilation/cooling, Water drain holes.....96
- Radio interference and suppression, mounting, allignement...96
- Transmission couplings and pulleys (shaft fitments).....97
- Balancing, insulation resistance.....97
- Commissioning, Bearings..... 98
- Bearing replacement.....99
• Motor Inquiry Form.....100
INDEX A - I.....101
INDEX K - Z.....102

GAMAK

Gamak was founded in **1961** to fulfill the needs of the **Turkish industry** for locally produced critical component, the "**Electric Motor**". In a very short time we started the production of the first electric motor made in Turkey. We created an alternative that eliminated the problems caused by imported motors, like cost, spare parts sourcing. We gained a well-deserved reputation for our quality. With every passing day we continue to grow and develop.

During the half a century since, we've become one of the leading producers of electric motors, not just in Turkey but in the world as well. With our products ranging **from 0.06 kW to 1000 kW**, we have been able to meet the motor needs of almost every industry. We've produced almost every component required for the manufacture of Electric Motors within our own factory; we've combined the whole production process under one roof. We have become one of the few producers that can enamel their own wire; we've established one of the leading laboratories in Europe.

Today, in our **50,000 sqm** plant within our **330,000 sqm** area, we continue to empower the Turkish industry with our nearly **900 work force.**

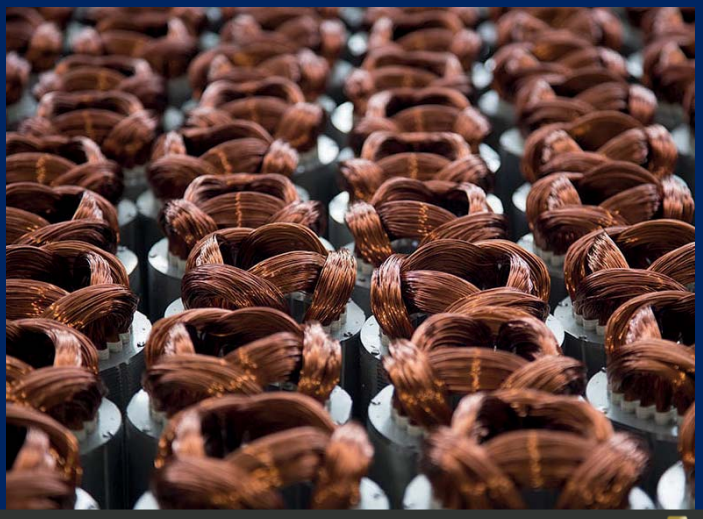

PRODUCTS OVERVIEW

	Output data	Frame size	*Page*
Mechanical&Electrical Design: 3-Phase, Totally Enclosed (IP 55) Squirrel Cage Induction Motors	0,06...1000 kW	56...450	6...24
Standard Series Motors			
Ratings&Performance			25...34
IE2 - High Efficiency Motors	0,06...1000 kW	80...450	25...30
IE3 - Premium Efficiency Motors	0,75.....400 kW	80...400	31...33
Multi-Speed, Pole Changing Motors			34...41
Constant-torque applications	0,06...168 kW	56...315	35...38
Variable-torque applications	0,035...175 kW	63...315	39...41
New Modular Elit Series	3...37 kW	132...200	54...65
Frequency Converter Applications			66...69
Forced Ventilated Motors	0,12...1000 kW	63...450	67
Encoder Fitted Motors	0,12...1000 kW	63...450	68
Single Phase Motors			70...81
Permanent Split Capacitor Motors	0,12...3 kW	63...100	75
Capacitor Start/Capacitor Run Motors	0,12...4 kW	63...112	76
Shaded Pole Motors	5...24 W		80-81
Definite Purpose Motors			82...92
Brake Motors			83-84
Standard brake motors			
Low torque brake motors			83
Open Drip-Proof Motors - IP23	55...1000 kW	225...450	84
Smoke Extraction Motors - F300	0,18...160 kW	71...315	85...90
Marine Motors			
Special Application Motors			

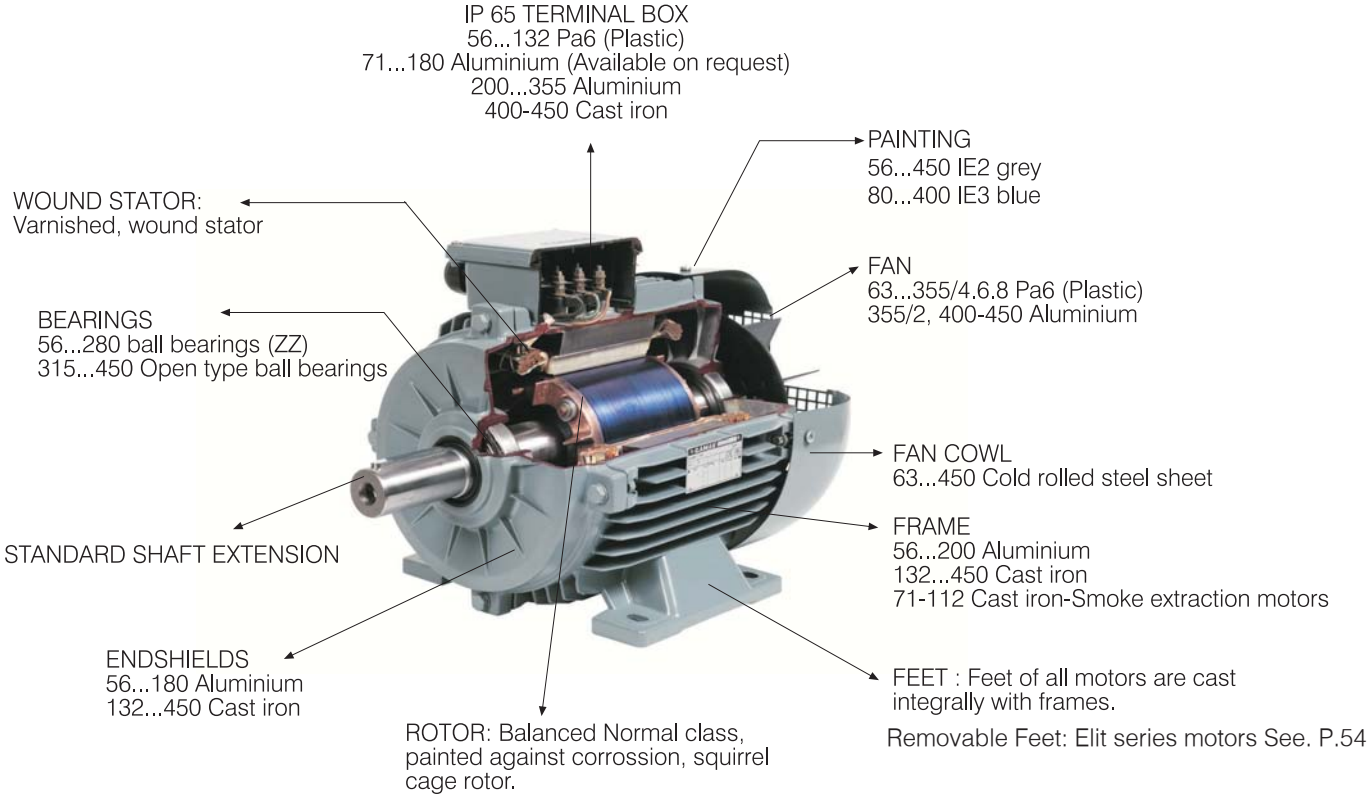

PRODUCT CODE

Standard High Efficiency Induction Motors, Multi Speed and Smoke Extraction Motors

2 V. C A G M M 2E D 100 L 4 a

- 2 — Two separate windings two speed motors
- V. — Two speed motors suitable for applications where load torque increases with the square of speed.(If not denoted, the motor is suitable for constant torque application.)
- C — Compact motor (Increased output in smaller frame size)
- A — Aluminium-alloy (If not denoted, cast iron construction)
- G — GAMAK 3-phase, cage rotor induction motors
- M — Totally-enclosed, surface cooled
- M — Totally-enclosed, surface cooled+closed circuit internally cooled
- 2E — 2E: IE2 - "High Efficiency" motors; 3E: IE3 - "Premium Efficiency" motors
- D — Smoke extraction motors
- 100 — Shaft height (mm) (IEC 60 072-1)
- L — Frame length: S : Short, M : Medium, L : Long
- 4 — Number of pole = 2 : 3000 min^{-1}; 4 : 1500 min^{-1}; 6 : 1000 min^{-1}; 8 : 750 min^{-1}
- a — Iron core length

DESIGNATION OF BEARINGS

S F N *A G M 2E* **B F**

Affix

S : Special bearing arrangement (56...450)
F : Fixed Non Drive End bearing (56...132)
N : Greasing nipples for re-lubrication, Non Drive End bearing fixed, Drive End Cylindrical roller bearing (132...450)

Suffix

B : Common Drive and Non Drive End bearing with Non Drive End bearing fixed (132...450)
F : Drive end bearing fixed (56...450)

SINGLE PHASE MOTORS

Split Phase Permanent Capacitor Design and Capacitor Start/Capacitor Run Design

M S D 100 L 4 a

M : Single phase, squirrel cage induction motor, totally enclosed fan cooled
S : Capacitor start + Capacitor run design
D : Split phase permanent capacitor design

100 : Shaft height (mm) (IEC 60 072-1)
L : Frame length (S : Short, M : Medium, L : Long)
4 : Number of pole : 2 and 4 pole
a : Iron core length

SHADED POLE MOTORS

L N G F 84 13 K

L → Impedance protection
N → Non Ventilated
G → GAMAK single phase, shaded pole fan motor
F → Totally enclosed, IP 42

84 → No. of pole, 84: 4 pole
82: 2 pole
13 → Iron core length
K → Sintered iron bearing design.
R stands for deep groove ball bearing design

3-PHASE
TOTALLY ENCLOSED (IP 55)
STANDARD INDUCTION MOTORS

	Page
Standards and Recommendations	7
Mechanical Design	8...16
Electrical Design	17...23
Efficiency Regulations	24
Ratings and Performance	25...34

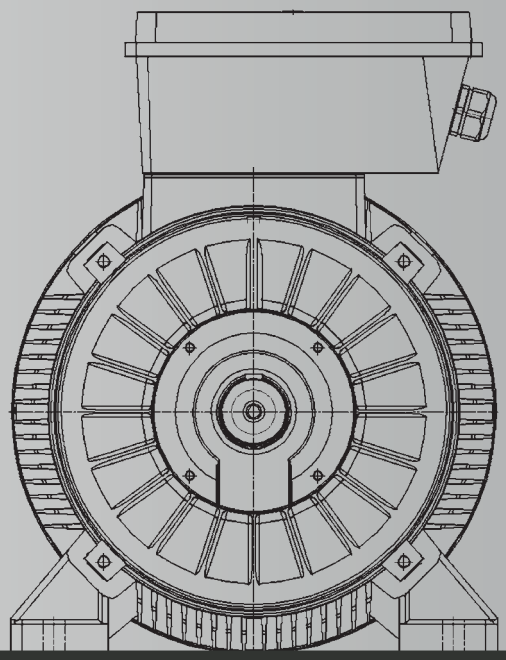

STANDARDS AND RECOMMENDATIONS

This catalogue deals with mechanical and electrical features of 3-phase, cage-rotor, totally enclosed, general and definite purpose industrial use induction motors of frame sizes ranging from 56 to 450 which give the distance from center-line of shaft to bottom of foot in mm, in accordance with IEC (International Electrotechnical Commission) recommendations.

GAMAK induction motors are designed, manufactured and tested according to the following standards and recommendations.

TS	IEC	DIN/EN	
TS EN 50 347	*60 072-1	DIN EN 50 347	Dimensions and output ratings of foot mounted motors (IM B3) Relationship between frame sizes and output ratings.
TS 3067 TS 3205 EN 60 034-1	60 034-1	DIN EN 60 034-1	Rating and performance.
TS 3206 EN 60 034-2-1	60 034-2-1	DIN EN 60 034-2-1	Method for determining losses and efficiency of rotating electrical machinery from tests.
TS 3209 EN 60 034-5	60 034-5	DIN EN 60 034-5	Classification of degrees of protection provided by enclosures.
TS 3210 EN 60 034-6	60 034-6	DIN EN 60 034-6	Methods of cooling.
TS 3211 EN 60 034-7	60 034-7	DIN EN 60 034-7	Symbols for types of construction and mounting arrangements.
TS 3212 EN 60 034-8	60 034-8	DIN EN 60 034-8	Terminal markings and direction of rotation.
TS 3213 EN 60 034-9	60 034-9	DIN EN 60 034-9	Noise limits.
TS 3583	60 034-11	DIN EN 60 034-11	Built-in thermal protection, rules for protection.
TS 3067	60 034-12	DIN EN 60 034-12	Starting performance of single-speed motors.
TS 3067	60 034-14	DIN EN 60 034-14	Measurement, evaluation and limits of the vibration severity.
TS 83 HD 472	60 038	DIN IEC 60 038	Standard voltages.
TS 3336 EN 60 085	60 085	DIN EN 60 085	Classifications of materials for the insulation of electrical machines in relation to their thermal stability in service.
TS 3067		DIN 42 925	Terminal-box cable entries.
TS EN 50 347	60 072-1	DIN 748-1	Cylindrical shaft-ends.

* IEC 60 072-1 specificies only dimensions and output ratings of both foot and flange mounted 3-phase cage induction motors (TEFV) but does not furnish the relationship between frame sizes and output ratings.

MECHANICAL DESIGN

Frames, end-shields and flanges

The following table shows the materials of motor frames, endshields and flanges :

Frame Size	Motor frames	End-shields	Flanges		
			B5	B14/Small	B14/Large
56...100	Aluminium	Aluminium	Alumininium	Aluminium	Aluminium
112					Cast Iron
132	Aluminium or Cast Iron	Aluminium or Cast Iron	Aluminium or Cast Iron		
160			Cast Iron	Cast Iron	
180				-	-
200		Cast Iron		-	-
225...450	Cast Iron				

The feet of all standard series motors are cast integrally with frames.

Frame sizes 132 to 180 has two integrally cast eyebolts. Frame sizes 160 and 180 additionally have a threaded hole ready to fit a lifting eyebolt of DIN 580.

Frame sizes 200 to 450 are supplied with lifting eyebolt (DIN 580).

Enclosure degrees of protection

The degrees of protection are specified in accordance with IEC publication DIN EN 60 034-5, by means of letters IP (International Protection) followed by two characteristic numerals.

Symbol	First Numeral	Second Numeral
	Protection against contact and ingress of foreign bodies.	Protection against water.
IP 55	Complete protection against contact with live or moving parts inside the enclosure. The ingress of dust is not totally prevented, but dust does not enter in sufficient quantity to interfere with satisfactory operation of the motor.	Water projected by a nozzle against the motor from any direction will have no harmful effect.
IP 56		Water from heavy seas or water projected in powerful jets will not enter the motor in harmful quantities.

Note: DIN EN 60 034-5 does not specify types of protection of machines for the use in an explosive atmosphere, as well as degrees of protection against mechanical damage of the machine or, conditions such as moisture (produced by condensation), corrosive vapours, fungus or vermin.

All standard range GAMAK motors are totally enclosed and comply with IP 55 degree of protection suitable for use in dusty and damp surroundings. There is no need of special measures to be taken for protecting the standard range motors against the effects of moderate ambient conditions when they are properly installed outdoors. Motors must be protected against direct solar radiation.

However, the following protective measures have to be taken against extremely severe climatic conditions such as out-door operation, dampness, chemical and coastal corrosive atmospheres :

— Special protective paint finish,
— Degree of protection IP 56,
— Special varnishing of coil-heads against high humidity,
— For all out-door installations and vertical mounting arrangements, the following precautions are to be taken, The cooling efficiency of motors must always be maintained :
  • Shaft down : Protective cover (Canopy),
  • Shaft up : Special protective cover or additional bearing-seal to prevent the ingress of water.
— Precautions against condensation are :
  Providing drain holes at drive and/or non-drive end depending which are best positioned to suit the particular mounting arrargement. Motor enclosure degree of protection will reduce to IP 44 if drain plugs are removed.

Where motors are left standing for long periods in damp conditions or where condensation is likely, we recommend that heaters are fitted. They should be energised whenever the motor is turned off to prevent condensation forming within the motor enclosure.

Recommended heater ratings

Frame size	Heater	
	Supply voltage V	Rating W
56... 71 80...100 112...180 200...280 315...450	110 or 220	16 40 60 80 120

Alternatively, a low voltage of 5 to 10% of motor rated voltage and a current of 20 to 30% of motor rated current applied to the stator terminals U_1 and V_1 via an auto-transformer, after the main supply is switched off, will provide adequate heating.

Cooling (TS 3210 EN 60 034-6)

Motors of frame size 56 have no cooling-fan (IC 410). Cooling is maintained by free convection.

Motors of frame sizes 63 to 450 are surface cooled by means of an external radial flow cooling-fan (IC 411) which is protected by a steel sheet cowl with standard test-finger proof openings for sufficient air flow. The cooling-fan is fixed onto the non-drive end of the motor shaft and operates independent of the direction of rotation. The cooling fans of frame size 63...355 are injection mould high grade polyamide and frame sizes 400 and 450 is aluminium alloy.

Terminal box

All the terminal boxes comply with degree of protection IP 65, and are placed to the front and on top of motor frames, allowing an easy cable entry from both sides. In the basic design, the motors have six fixed terminals, and are fitted with an earthing-screw inside the terminal box. A connection diagram is provided in the cover of each terminal-box.

The terminal boxes of frame sizes 56 to 180 are injection mould, high-grade reinforced polyamide, frame sizes 200 to 355 are pressure die-cast in corrosion resistant aluminium alloy and sizes 400 and 450 is in cast iron.

On request, the terminal boxes of frame sizes 71...132 can be pressure die-cast in corrosion resistant aluminium alloy.

Cable entry

The entry of the cable to the terminal box as per DIN 42 925 is maintained by means of compression glands produced to DIN EN 50 262 or water resistant (IP 68) compression glands on request.

Frame size	56	63	71	80	90	100	112	132	160	180	200	225	250	280	315	355	400	450
Dimensions of compression glands	Pg 11		Pg 16					Pg 21	Pg 29		Pg 36		Pg 42		Pg 48	M79	-	
Number of compression glands	1					2											*4	
Maximum cable outer diameter mm	11		16					21	29		36		42		48	59	59	
Maximum cable cross section mm^2	1,5		2,5					6	16		50		120		240	400	400	
Terminal size	M4x12							M5x15	M6x24			M8x28		M10x24	M12x43	M16x55		

* Only cable entry holes available (Ø80 mm).

Bearings

The motors are fitted with high quality noise tested single-row deep-groove radial ball-bearings (DIN 625) or cylindrical roller bearings (DIN 5412).

Single-row deep groove radial ball bearing design is the standard bearing arrangement of GAMAK electric motors. The maximum radial and axial forces which can be subjected to the bearings of standard design (Fig. 1, 2 and 3) are given at page 12 and 13. Reinforced design with cylindrical roller bearing (Fig. 4) should be considered in motors above frame size 160 where external radial force applied on shaft extension is greater than the values given for standard design at page 12. Please consult us if the external axial load subjected on the bearings is even greater than the values given for reinforced design at page 13 as special bearing arrangement may be required.

Standard design with single row deep groove ball bearings

Frame size	No. of pole	D.End	N.D. End	Fig. No.
56	2-4	6200 ZZ		1
63	2-4	6201 ZZ		
71	2-4-6-8	6202 ZZ		
80	2-4-6-8	6204 ZZ		
90	2-4-6-8	6205 ZZ		
100-112	2-4-6-8	6206 ZZ		
132	2-4-6-8	6208 ZZ		
160	2-4-6-8	6309 ZZ C3	6209 ZZ C3	2
180	2-4-6-8	6310 ZZ C3	6210 ZZ C3	
200	2-4-6-8	6312 ZZ C3	6212 ZZ C3	
225	2-4-6-8	6313 ZZ C3	6213 ZZ C3	

Frame size	No. of pole	D.End	N.D. End	Fig. No.
250	2-4-6-8	6315 ZZ C3	6215 ZZ C3	2
280	2	6315 ZZ C3		
	4-6-8	6316 ZZ C3		
315	2	6316 C3		3
	4-6-8	6318 C3		
355	2	6318 C3		
	4-6-8	6321 C3		
400	2	6318 C3		
	4-6-8	6324 C3		
450	2	6320 C3		
	4-6-8	6326 C3		

- Single row deep groove ball bearings are pre-loaded in the axial direction by a corrugated disc springs (Fig. 1 and 2) and helical compression springs (Fig. 3) in order to ensure smooth running (reduced vibrations and noise) which in turn allow the attainment of maximum bearing life.

Arrangement of bearings

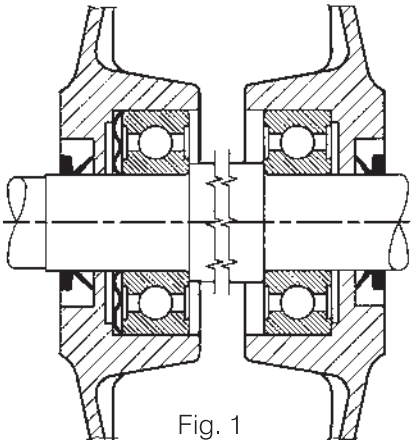

Fig. 1

D.End Floating Ball-Bearing (Spring loaded) — **N.D.End** Floating Ball-Bearing

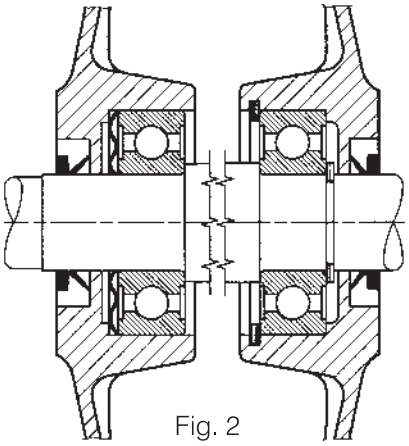

Fig. 2

D.End Floating Ball-Bearing (Spring loaded) — **N.D.End** Fixed Ball-Bearing

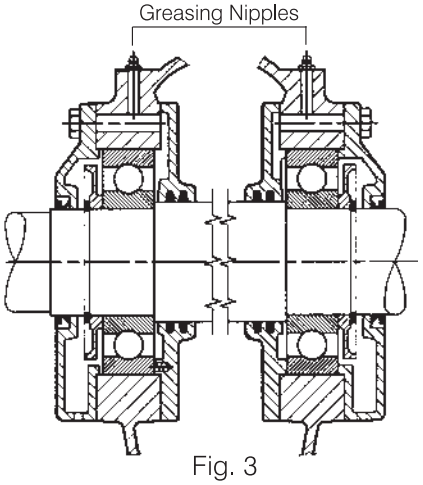

Fig. 3

D.End Floating Ball-Bearing (Spring loaded) — **N.D.End** Fixed Ball-Bearing

Motors of frame sizes 56...132 (Fig.1) and frame sizes 160...280 (Fig.2) have double shielded ZZ bearings which are factory grease packed/sealed for life.

On request, motors of frame sizes 56 to 132 can be manufactured in fixed bearing design (Fig.2) in order to avoid the movement of the shaft in axial direction.

Motors of frame sizes 315 and 450 (Fig.3) have open type single-row deep groove ball bearings and are equipped with greasing nipples for re-lubrication during operation. The grease retaining disc between the bearing and the external bearing cap, keeps the grease in the bearing.

On request, motors of frame sizes 160 to 250 can be manufactured in identical bearing design by using same size ZZ (both sides sealed) or open type (greasing nippled) bearings at both ends. This design is capable of carrying greater external axial forces. Please consult us for the values of permissible external axial forces.

Rubber V-ring sealings are fitted at both drive and non drive end. Oil seals available on request.

Reinforced design with cylindrical roller bearing (For excessive radial forces)

Reinforced design with cylindrical roller bearings is recommended for applications like belt and pulley drives where external radial forces may be greater than stipulated at page 12.

Frame size	No. of pole	D.End	N.D.End	Fig. No.
132	2-4-6-8	NU 208 E	6208 C3	4
160	2-4-6-8	NU 309 E	6309 C3	
180	2-4-6-8	NU 310 E	6310 C3	
200	2-4-6-8	NU 312 E	6312 C3	
225	2-4-6-8	NU 313 E	6313 C3	
250	2-4-6-8	NU 315 E	6315 C3	
280	2	NU 315 E	6315 C3	
	4-6-8	NU 316 E	6316 C3	
315	2	NU 316 E	6316 C3	
	4-6-8	NU 318 E	6318 C3	
355	2	NU 318 E	6318 C3	
	4-6-8	NU 321 E	6321 C3	
400	2	NU 318 E	6318 C3	
	4-6-8	NU 324 E	6324 C3	
450	2	NU 320 E	6320 C3	
	4-6-8	NU 326 E	6326 C3	

Arrangement of bearing

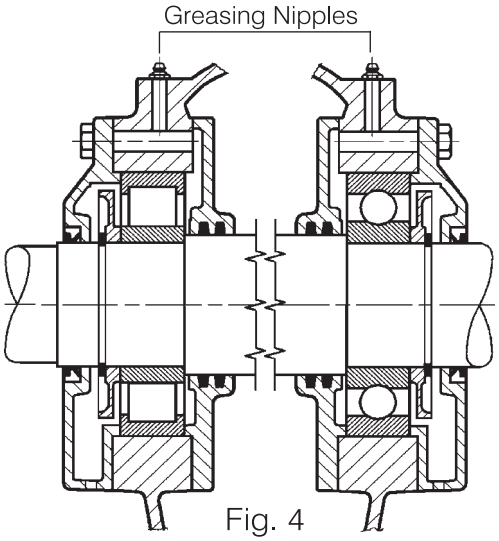

Fig. 4

D.End : Cylindrical Roller Bearing **N.D.End** : Fixed Ball-Bearing

Where the external radial force applied to the bearing of motors having reinforced design with cylindrical roller bearing (NU series) is too small during operation, slippage occurs between the rollers and raceways which may result in smearing and possible premature bearing failure. Please consult us if radial force is very small or strong shock loads or vibration are expected as special bearing arrangements may be required.

The reinforced design with cylindircal roller bearing is manufactured with greasing nipples in frame sizes 160 to 450.

Maintenance of Bearings

Bearings should be lubricated with a grease having lithium soap as thickener and mineral oil which contains oxidation and corrosion inhibitors (Antifriction bearing greases K3 to DIN 51 825, range of working temperature -30°C...+140°C). However, a grease suitable for working conditions should be used if the motor is going to be operated beyond rated ambient temperature limits.

The amount of grease to be filled in the bearing should be around 1/3 of its internal volume. Rule of thumb; the inner diameter of the bearing in mm correspords to the minimum amount of grease to be used in g. The regreasable bearings (Fig. 3 and 4) have to be relubricated as per the recommendations given at page 93. However, the re-lubrication should be done after 3 years of operation at the latest or more frequently where unfavaurable operating conditions prevail.

Where the bearings of the motor is not subjected to any axial or radial forces, the nominal life of bearings is minimum 40 000 hrs. The permissible radial and axial forces given at pages 12, 13 and 14 care calculated according to 20 000 hrs nominal life at 50 Hz frequency. In practice, the majority of the bearings attain a much longer life.

Shaft of motors are ground to extremely fine limits to ensure a perfect fit and interchangeability of bearings.

Permissible mechanical forces

The permissible axial and radial forces are given in the following tables in Newton (N). In case the given axial and radial forces are to be exceeded, the following information has to be specified when ordering, in order to determine the correct bearing arrangement and shaft size:

Frame size, type of construction and mounting arrangement, type of duty, point of load application, nature of load (magnitude, direction, constant, or varying), type of machine to be driven, type of drive (Pulley, toothwheel, coupling, etc.)

Permissible radial loads

F_r = Radial force (N)
X = The distance (mm) from the shoulder of the shaft to the line of application of the force. Dimensions X_{max} is thus the length of free shaft extension. Centre line of pulley must be within the free shaft extension.

$$F_r = 1{,}91 \cdot \frac{P.k}{D.n} \cdot 10^7 \quad (N)$$

P : Motor output (kW)
n : Full-load speed (min^{-1})
D : Pulley diameter (mm)
k : Belt tension factor (Approx.)

- 2 for flat belt with idler pulley drives.
- 2,25 for V-belt drives.
- 3 for flat and poly V-belt without idler pulley drives.

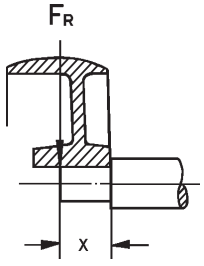

Permissible radial loads

Standard design with single row deep groove ball bearing (Axial force Fa = 0)

Frame Size	3000 min^{-1}		1500 min^{-1}		1000 min^{-1}		750 min^{-1}	
	X_0 N	X_{max} N	X_0 N	X_{max} N	X_0 N	X_{max} N	X_0 N	X_{max} N
56	260	230	330	290	-	-	-	-
63	350	300	450	390	-	-	-	-
71	400	340	510	430	580	490	640	540
80	660	540	840	680	980	800	1070	880
90	740	600	930	760	1070	870	1190	970
100	1040	830	1310	1050	1500	1210	1670	1340
112	1040	840	1300	1050	1490	1210	1650	1340
132	1520	1220	1940	1560	2220	1790	2490	2000
160	2800	2230	3520	2800	4050	3220	4470	3560
180	3230	2630	4090	3330	4710	3830	5180	4210
200	4290	3540	5450	4500	6220	5140	6900	5700
225	4780	3980	6030	4810	6880	5500	7650	6100
250	5800	4730	7330	6000	8420	6870	9230	7540
280	5770	4800	7860	6610	9040	7600	10100	8480
315	6000	5100	8760	7270	9910	8220	11100	9180
355	6700	5800	10400	8620	12300	10100	13700	11300
400	5800	5100	10700	9060	12400	10500	14000	11900
450	*	*	11900	10300	13900	12000	15700	13600

Reinforced design with cylindrical roller bearing (Axial force Fa = 0)

Frame Size	3000 min^{-1}		1500 min^{-1}		1000 min^{-1}		750 min^{-1}	
	X_0 N	X_{max} N	X_0 N	X_{max} N	X_0 N	X_{max} N	X_0 N	X_{max} N
132	3900	3100	4800	3800	5500	4400	6000	4800
160	6890	5490	8480	6750	9620	7660	10500	8370
180	7730	6270	9540	7750	10800	8790	11800	9580
200	10600	8740	13100	10800	14700	12200	16100	13300
225	12600	10500	15600	12400	17600	14000	19300	15400
250	16700	13700	20700	16900	23400	19100	25400	20700
280	16800	14200	22100	18600	25000	21000	27400	23000
315	18000	15500	28900	23700	32600	26800	35600	29200
355	23500	20200	26100	21500	29700	24500	32600	26900
400	22500	19800	36400	30900	41200	35000	44800	38000
450	*	*	40800	35400	46300	40100	50800	44000

* Please consult us for the values.

Permissible external axial loads

Standard design with single row deep groove ball bearing

Frame size	HORIZONTAL SHAFT				VERTICAL SHAFT											
	Tensile	Thrust			Shaft down						Shaft up					
					Force down			Force up			Force down			Force up		
	Without $F_r = 0$	With max. F_r at X_o	With max. F_r at X_{max}	Without $F_r = 0$	With max. F_r at X_o	With max. F_r at X_{max}	Without $F_r = 0$	With max. F_r at X_o	With max. F_r at X_{max}	Without $F_r = 0$	With max. F_r at X_o	With max. F_r at X_{max}	Without $F_r = 0$	With max. F_r at X_o	With max. F_r at X_{max}	Without $F_r = 0$
	N	N	N	N	N	N	N	N	N	N	N	N	N	N	N	N
2 pole (3000 min^{-1})																
56	50	140	120	180	40	40	40	140	130	190	130	120	170	60	60	60
63	80	170	150	220	70	70	70	180	150	230	160	140	210	90	90	90
71	100	190	160	240	90	90	90	200	170	250	170	140	230	110	110	110
80	140	320	270	410	120	120	120	340	280	430	300	250	400	160	160	160
90	160	350	290	430	130	130	130	370	320	470	310	250	410	190	190	190
100	220	490	400	590	170	170	170	520	440	650	430	340	560	270	270	270
112	220	490	410	590	160	160	160	530	450	660	420	340	550	280	280	280
132	350	710	580	820	200	200	200	820	690	1000	530	400	700	500	500	500
160	1650	1090	840	1230	1210	950	1470	1270	1010	1530	790	530	1050	1690	1430	1950
180	1820	1190	920	1300	1250	980	1550	1460	1190	1760	740	460	1030	1980	1710	2270
200	2590	1910	1590	2090	1830	1490	2230	2270	1940	2670	1330	990	1730	2770	2440	3170
225	2820	2070	1730	2260	1920	1560	2390	2510	2150	2970	1360	1000	1830	3070	2710	3530
250	3120	2410	1950	2580	1990	1510	2530	3000	2520	3540	1450	980	1990	3530	3060	4080
280	5200	4420	4040	4670	3710	3280	4420	5250	4810	5950	3180	2740	3880	5780	5350	6490
315	5090	4780	5050	5090	2710	2290	2410	7110	6690	7810	2710	2290	3410	7110	6690	7810
355	5670	5300	5710	5670	2510	2020	3270	8840	8350	9600	-	-	-	-	-	-
400	5080	4790	5100	5080	*	*	*	10850	10440	11670	-	-	-	-	-	-
450	*	*	*	*	*	*	*	*	*	*	-	-	-	-	-	-
4 pole (1500 min^{-1})																
56	50	210	190	260	40	40	40	210	190	270	200	180	260	60	60	60
63	80	270	240	330	70	70	70	270	240	350	260	230	330	90	90	90
71	100	290	250	360	90	90	90	300	260	370	270	230	340	110	110	110
80	140	490	420	610	120	120	120	510	440	640	460	390	590	160	160	160
90	160	540	460	650	120	120	120	570	490	700	490	410	620	200	200	200
100	220	740	630	880	150	150	150	790	680	970	660	540	830	290	290	290
112	220	750	640	870	130	130	130	810	700	980	640	530	810	310	310	310
132	350	1090	920	1240	180	180	180	1210	1040	1450	880	710	1120	520	520	520
160	2110	1510	1180	1690	1540	1200	1880	1740	1400	2090	1120	780	1460	2160	1820	2510
180	2340	1660	1310	1820	1630	1260	2020	1990	1620	2380	1110	740	1500	2510	2140	2900
200	3370	2610	2180	2870	2440	1990	2970	3020	2570	3560	1940	1490	2470	3520	3070	4060
225	3650	2860	2300	3090	2480	1900	3100	3410	2840	4030	1920	1340	2540	3970	3400	4590
250	4060	3290	2680	3520	2610	1980	3340	4010	3380	4740	2080	1450	2800	4550	3920	5270
280	7060	6720	6240	7060	4900	4290	5910	7970	7360	8980	4900	4290	5910	7970	7360	8980
315	7840	7440	7390	7840	4620	3870	5750	10200	9420	11300	4620	3870	5750	10200	9420	11300
355	9410	8950	9700	9410	3870	2910	5330	14600	13600	16100	-	-	-	-	-	-
400	9280	8740	9420	9220	*	*	1760	20500	19600	22100	-	-	-	-	-	-
450	10300	9770	10440	10370	*	*	2400	21900	21000	23600	-	-	-	-	-	-
6 pole (1000 min^{-1})																
71	100	360	320	450	80	80	80	380	330	470	340	300	430	120	120	120
80	140	630	550	770	110	110	110	660	570	810	590	500	740	170	170	170
90	160	680	580	810	110	110	110	710	610	870	620	520	770	210	210	210
100	220	940	800	1100	140	140	140	1000	850	1200	840	700	1050	300	300	300
112	220	940	810	1090	120	120	120	1010	880	1220	810	680	1010	320	320	320
132	350	1370	1170	1560	150	150	150	1520	1310	1800	1130	920	1410	550	550	550
160	2470	1840	1450	2040	1780	1370	2190	2120	1720	2530	1360	950	1770	2540	2140	2950
180	2730	2010	1590	2210	1910	1480	2380	2360	1930	2830	1400	960	1860	2880	2450	3340
200	3920	3130	2620	3420	2810	2290	3450	3610	3080	4240	2310	1790	2950	4110	3580	4740
225	4240	3450	2800	3680	2810	2120	3540	4160	3470	4890	2250	1560	2980	4720	4030	5450
250	4750	3940	3220	4210	3060	2320	3920	4780	4030	5630	2530	1780	3390	5310	4570	6170
280	8340	7950	7340	8340	5900	5180	7090	9280	8560	10500	5900	5180	7090	9280	8560	10500
315	9170	8700	8790	9170	5260	4380	6600	12200	11300	13500	5260	4380	6600	12200	11300	13500
355	11100	10600	11300	11100	5220	4090	6940	16600	15400	18300	-	-	-	-	-	-
400	11200	10600	11500	11200	1600	*	3500	22700	21700	24600	-	-	-	-	-	-
450	12200	11500	12300	12280	1670	*	3600	25200	24100	27200	-	-	-	-	-	-
8 pole (750 min^{-1})																
71	100	420	370	520	80	80	80	440	390	540	400	350	500	120	120	120
80	140	730	630	880	110	110	110	750	650	920	680	590	860	170	170	170
90	160	800	690	950	110	110	110	830	720	1010	740	620	920	210	210	210
100	220	1100	940	1300	140	140	140	1160	1000	1400	1000	840	1240	300	300	300
112	220	1100	940	1270	120	120	120	1170	1020	1400	970	810	1200	320	320	320
132	350	1610	1380	1850	180	180	180	1740	1500	2070	1390	1160	1720	520	520	520
160	2760	2090	1640	2340	2020	1570	2480	2360	1910	2820	1600	1150	2060	2780	2330	3240
180	3040	2290	1820	2520	2130	1640	2650	2680	2190	3200	1610	1130	2130	3200	2710	3720
200	4410	3550	2970	3910	3230	2630	3940	4020	3430	4730	2730	2130	3440	4520	3930	5230
225	4780	3870	3130	4220	3320	2550	4140	4510	3750	5340	2760	1990	3580	5070	4310	5900
250	5290	4440	3640	4750	3430	2600	4390	5340	4500	6300	2900	2060	3860	5880	5040	6840
280	9480	8990	8230	9480	6930	6120	8280	10200	9390	11600	6930	6120	8280	10200	9400	11600
315	10400	9880	9790	10400	6350	5360	7860	13300	12300	14800	6350	5360	7860	13300	12300	14800
355	12700	12100	12600	12700	6580	5310	8510	17900	16600	19800	-	-	-	-	-	-
400	12600	12000	12900	12600	2430	1200	4540	25000	23700	27100	-	-	-	-	-	-
450	14100	13300	14200	14100	3330	2100	5500	26800	25700	29000	-	-	-	-	-	-

* Please consult us for the values.

Permissible external axial loads

Reinforced design with cylindrical roller bearing

Frame size	HORIZONTAL SHAFT				VERTICAL SHAFT											
	Tensile	Thrust			Shaft down						Shaft up					
					Force down			Force up			Force down			Force up		
	Without $F_r = 0$	With max. F_r at		Without $F_r = 0$	With max. F_r at		Without $F_r = 0$	With max. F_r at		Without $F_r = 0$	With max. F_r at		Without $F_r = 0$	With max. F_r at		Without $F_r = 0$
		X_o	X_{max}		X_o	X_{max}		X_o	X_{max}		X_o	X_{max}		X_o	X_{max}	
	N	N	N	N	N	N	N	N	N	N	N	N	N	N	N	N
2 pole (3000 min^{-1})																
132	1370	1100	750	1370	960	620	1290	1200	850	1520	960	620	1290	1200	850	1520
160	2450	2040	1440	2450	1740	1140	2270	2220	1620	2750	1740	1140	2270	2220	1620	2750
180	2820	2400	1780	2820	1750	1330	2550	2680	2050	3280	1950	1330	2550	2680	2050	3280
200	3710	3160	2380	3710	2570	1790	3350	3520	2730	4290	2570	1790	3350	3520	2730	4290
225	4150	3480	2590	4150	2770	1870	3720	3920	3020	4870	2770	1870	3720	3920	3020	4870
250	5000	4150	2880	5000	3200	1920	4410	4750	3460	5960	3200	1920	4410	4750	3460	5960
280	5180	4080	2950	4650	3230	2090	4330	4940	3790	6040	2700	1550	3800	5470	4330	6570
315	5180	5010	3910	5180	2770	1650	3790	6420	5300	7430	2770	1650	3790	6420	5300	7430
355	5670	5660	4620	5670	2150	690	3270	8470	7020	9600	-	-	-	-	-	-
400	5090	5270	5270	5090	*	*	*	10370	9150	11670	-	-	-	-	-	-
450	*	*	*	*	*	*	*	*	*	*	-	-	-	-	-	-
4 pole (1500 min^{-1})																
132	1820	1500	1040	1820	1280	830	1700	1610	1160	2020	1280	830	1700	1610	1160	2020
160	3240	2720	1940	3240	2320	1540	3010	2950	2160	3640	2320	1540	3010	2950	2160	3640
180	3760	3200	2390	3760	2650	1830	3440	3530	2710	4310	2650	1830	3440	3530	2710	4310
200	4950	4200	3180	4950	3530	2500	4550	4610	3580	5630	3530	2500	4550	4610	3580	5630
225	5520	4650	3250	5520	3710	2300	4960	5210	3800	6460	3710	2300	4960	5210	3800	6460
250	6640	5540	3880	6640	4340	2660	5930	6270	4600	7860	4340	2660	5930	6270	4600	7860
280	7100	6200	4630	7100	4440	3130	6040	7270	5960	8870	4440	3130	6040	7270	5960	8870
315	7840	7340	5220	7840	3910	1770	5750	9460	7320	11300	3910	1770	5750	9460	7320	11300
355	9410	9540	7920	9410	3280	1200	5330	14000	11900	16100	-	-	-	-	-	-
400	9220	9600	9700	9220	*	*	1760	19600	17100	22100	-	-	-	-	-	-
450	10370	10620	10800	10350	*	*	2400	21100	18600	23600	-	-	-	-	-	-
6 pole (1000 min^{-1})																
132	2160	1770	1250	2160	1550	1030	2040	1890	1390	2380	1550	1030	2040	1890	1390	2380
160	3840	3240	2320	3840	2760	1830	3570	3520	2600	4330	2760	1830	3570	3520	2600	4330
180	4460	3790	2850	4460	3180	2230	4100	4150	3190	5070	3180	2230	4100	4150	3190	5070
200	5820	4960	3780	5820	4150	2950	5340	5450	4250	6640	4150	2950	5340	5450	4250	6640
225	6500	5530	3900	6500	4330	2680	5800	6240	4590	7710	4330	2680	5800	6240	4590	7710
250	7860	6580	4640	7860	5170	3210	7030	7420	5460	9280	5170	3210	7030	7420	5460	9280
280	8390	7320	5460	8390	5370	3490	7230	8490	6610	10400	5370	3490	7230	8490	6610	10400
315	9170	8740	6270	9170	4440	1920	6600	11300	8830	13500	4440	1920	6600	11300	8830	13500
355	11100	11300	9300	11100	4540	2110	6940	15900	13400	18300	-	-	-	-	-	-
400	11200	11700	11100	11200	*	*	3500	21700	18800	24600	-	-	-	-	-	-
450	12280	12570	12700	12300	*	*	3600	24100	21300	27000	-	-	-	-	-	-
8 pole (750 min^{-1})																
132	2450	2000	1400	2450	1790	1200	2340	2090	1500	2650	1790	1200	2340	2090	1500	2650
160	4340	3640	2620	4340	3150	2130	4060	3910	2890	4820	3150	2130	4060	3910	2890	4820
180	5010	4270	3210	5010	3590	2530	4620	4660	3590	5690	3590	2530	4620	4660	3590	5690
200	6580	5590	4260	6580	4770	3430	6110	6070	4730	7410	4770	3430	6110	6070	4730	7410
225	7360	6180	4370	7360	5080	3240	6720	6830	4990	8480	5080	3240	6720	6830	4990	8480
250	8800	7370	5220	8800	5830	3660	7910	8270	6100	10400	5830	3660	7910	8270	6100	10400
280	9510	8210	6140	9510	6310	4210	8400	9340	7240	11500	6310	4210	8400	9340	7240	11500
315	10400	9760	7000	10400	5440	2630	7860	12300	9540	14800	5440	2630	7860	12300	9540	14800
355	12700	12800	10300	12700	5830	3120	8510	17200	14400	19800	-	-	-	-	-	-
400	13000	13400	12200	13000	2000	*	5230	23100	19900	26400	-	-	-	-	-	-
450	14100	14400	14000	14100	*	*	5500	25800	22500	29000	-	-	-	-	-	-

* Please consult us for the values.

- All above values are :
  - based on L_{10} bearing life of minimum 20 000 hours.
  - for 50 Hz.
- Please inquiry for :
  - 60 Hz.
  - multi-speed motors.

Shaft extensions

The motors of standard design are built with one cylindrical shaft extension with shaft-key fitted in accordance to IEC 60 072-1. Motors with double shaft extension may be delivered on special orders. The free shaft-ends have threaded centre-bore to DIN 332-2 form D.

The run-out of the shaft, concentricity of mounting spigot and the perpendicularity of the face flange are within the permissible limits (Normal class) according to IEC 60 072-1. Motors with increased accuracy (Precision class) may be supplied on request.

Vibration

Shaft/rotor assemblies of all standard range motors are dynamically balanced with Half Shaft Key to the limits of grade N (normal) mechanical vibration class specified in DIN EN 60 034-14. Shaft fitments such as couplings, pulleys, gears and fans must also be balanced likewise to prevent undue vibration and adverse effects on bearing life.

Noise level

The international limits of noise produced by general purpose electric motors are defined in IEC 60 034-9, with which our standard range of motors comply. There are 3 main sources of noise :

1. Magnetic forces which make the stator core oscilate.
2. Bearings which generate noise due to imperfections in the geometry of the balls and rollers.
3. Cooling fan which generates so called ventilation noise.

Among these 3 main sources of noise, the ventilation noise is the most dominant factor especially on large motors. Special measures for further noise limitation can be taken on request.

Air-borne sound measurements are performed in a deadened sound testing chamber (reflection free room) according to DIN EN 21 680 Part 1.

The measuring surface sound pressure level **(L_{pfA})** in dB(A) is the mean value of the A-weighted sound pressure level measured in several places on a measuring surface at a distance of 1 m from the contour of the machine. Tolerance +3 dB(A).

Following values are for 50 Hz supply. Values will increase by approximately 4dB(A) for 60 Hz supply.

Measuring surface sound pressure level (L_{pfA})

Frame size	2 pole dB(A)	4 pole dB(A)	6 pole dB(A)	8 pole dB(A)
56	42	42	—	—
63	52	43	—	—
71	50	44	42	40
80	54	46	43	43
90	61	46	46	45
100	62	50	50	48
112	63	52	55	53
132	66	54	61	56
160	70	63	62	61
180	70	64	62	61
200	73	64	61	62
225	73	64	62	63
250	76	67	64	64
280	76	67	65	65
315	79	74	72	70
355	79	75	72	70
400	*	75	73	71
450	*	76	73	71

* Please consult us for the values.

Painting

IE2 high efficiency motors are all painted in grey (RAL 7031) and IE3 premium efficiency motors are painted in blue (RAL 5007) with a protective paint. Special external coatings for protection against excessive corrosive atmospheres, chemicals and microorganism are available on request.

Storage

Motors must be kept in a dry and vibration-free place if they have to be stored for a long period. The insulation resistance must be checked and the windings must be dried if necessary, before the motors are taken into operation. (Look at: Installation and Operation Pages 89...92)

Type of construction and mounting arrangement (TS 3211 EN 60 034-7)

Foot mounted

Figure	Designation	Description	Frame size
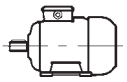	IM B3 IM 1001	On substructure.	56...450L
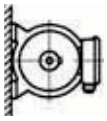	IM B6 IM 1051	On wall. Feet to the left viewing from D-End.	56...315M
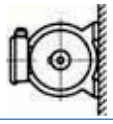	IM B7 IM 1061	On wall. Feet to the right viewing from D-End.	56...315M
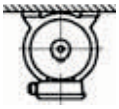	IM B8 IM 1071	On ceiling.	56...315M
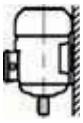	IM V5 IM 1011	O wall. Shaft extension downwards.	56...315M
	IM V6 IM 1031	On wall. Shaft extension upwards.	56...315M

Flange mounted (Without foot)

Figure	Designation	Description	Frame size
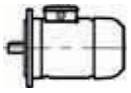	IM B5 IM 3001	D-End D-Flange form A, “FF.	56...315M
	IM V1 IM 3011	D-End D-Flange form A, “FF”. Shaft extension downwards.	56...450L
	IM V3 IM 3031	D-End D-Flange form A, “FF” Shaft extension upwards.	56...315M
	IM B14 IM 3601	D-End C-Face Flange form C, “FT”.	56...160L
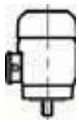	IM V18 IM 3611	D-End C-Face Flange form C, “FT”. Shaft extension downwards.	56...160L
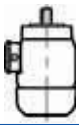	IM V19 IM 3631	D-End C-Face Flange form C, “FT”. Shaft extension upwards.	56...160L

Foot and flange mounted

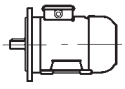	IM B35 IM 2001	On substructure, D-end F-Flange form A, “FF”.	56...450L
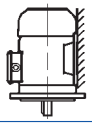	IM V15 IM 2011	On wall. D-End D-Flange form A, “FF”. Shaft extension downwards.	56...315L
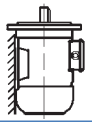	IM V36 IM 2031	On wall. D-End D-Flange form A, “FF”. Shaft extension upwards.	56...315M
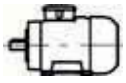	IM B34 IM 2101	On substructure, D-End C Face Flange form C, “FT”.	56...160L
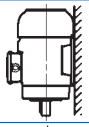	IM V58 IM 2111	On wall. D-End C Face Flange form C, “FT”. Shaft extension downwards.	56...160L
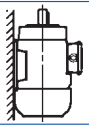	IM V69 IM 2131	On wall. D-End C Face Flange form C, “FT”. Shaft extension upwards.	56...160L

Without foot / Endshield at D-End

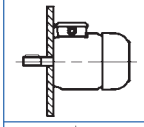	IM B9 IM 9101	Frame Face mounting.	56...315M
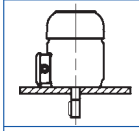	IM V8 IM 9111	Frame Face mounting. Shaft extension downwards.	56...450L
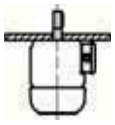	IM V9 IM 9131	Frame Face mounting. Shaft extension upwards.	56...315M

Foot mounted / Without endshield at D-End

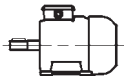	IM B15 IM 1201	On substructure. Frame Face mounting.	56...450L

ELECTRICAL DESIGN

Voltage and frequency

Motors are normally wound for a rated supply of 400 Volt and frequency of 50 Hz. However, motors for any standard supply from 110 to 690 V at frequencies of 50/60 Hz may be supplied on request.

Motors will operate satisfactorly within a voltage band of ±%5 of the rated voltage and ±%2 of the rated frequency. In case of continuous operation at the extreme voltage limits specified above, the temperature rise limits permitted for various insulation classes may be exceeded by 10 K maximum.

Motors wound for 50 Hz may generally be connected to 60 Hz supply. In this case the speed will increase by 20% with reference to various rated voltages at 50 Hz, the approximative multipliers to obtain the new performance values at 60 Hz are given in the following table.

50 Hz	60 Hz								
Rated voltage V	Supply voltage V	New performance data at full load							
		Output	Speed	I_N	M_N	I_A/I_N	M_A/M_N	M_K/M_N	I_0
220	220	1	1,2	1	0,83	0,87	0,75	0,85	0,73
	*220	1,15	1,2	1,15	0,96	0,98	0,93	1	1,12
	240	1,1	1,2	1	0,91	0,96	0,83	0,94	0,85
	255	1,15	1,2	1	0,96	1	0,93	1	0,93
380	380	1	1,2	1	0,83	0,87	0,75	0,85	0,73
	*380	1,15	1,2	1,15	0,96	0,98	0,93	1	1,12
	415	1,1	1,2	1	0,91	0,96	0,83	0,94	0,85
	440	1,15	1,2	1	0,96	1	0,93	1	0,93
	460	1,2	1,2	1	1	1,03	0,98	1,03	0,98
415	415	1	1,2	1	0,83	0,87	0,75	0,85	0,73
	*415	1,15	1,2	1,15	0,96	0,98	0,93	1	1,12
	460	1,1	1,2	1	0,92	0,98	0,90	0,96	0,87
	480	1,15	1,2	1	0,96	1	0,93	1	0,93
500	500	1	1,2	1	0,83	0,87	0,75	0,85	0,73
	*500	1,15	1,2	1,15	0,96	0,98	0,93	1	1,12
	550	1,1	1,2	1	0,92	0,98	0,90	0,96	0,87
	575	1,15	1,2	1	0,96	1	0,93	1	0,93
	600	1,2	1,2	1	1	1,03	0,98	1,03	0,98

* Special winding for 60 Hz.

I_N : Rated current
I_A : Starting current
I_0 : No-Load current
M_N : Rated torque
M_A : Starting torque
M_K : Breakdown torque

The motors, specially wound for 60 Hz supply, should be ordered with the following standardised outputs. Please consult us if higher outputs other than the ones listed below are required, as it is possible to increase the output of 50 Hz design by upto 20% in 60 Hz.

Standard Output (kW) at 50 Hz	Standard Output (kW) at 60 Hz
0,06	0,07
0,09	0,105
0,12	0,14
0,18	0,21
0,25	0,29
0,37	0,43
0,55	0,63
0,75	0,86
1,1	1,27
1,5	1,73
2,2	2,5
3	3,5

Standard Output (kW) at 50 Hz	Standard Output (kW) at 60 Hz
4	4,6
5,5	6,3
7,5	8,6
11	12,7
15	17,3
18,5	21,3
22	25,3
30	34,5
37	42,6
45	51,8
55	63,5
75	86,5

Standard Output (kW) at 50 Hz	Standard Output (kW) at 60 Hz
90	103
110	126
132	152
160	184
200	230
250	288
315	360
355	410
400	460
450	515
500	575

Please consult us for motors above 500 kW.

In the event that the motor run at 60Hz supply-no matter if they are specially wound to 60Hz or a 50Hz rated motor run at 60Hz supply- their efficiency levels to meet as per IEC standard 60034-30 will be different than of 50Hz rated motors. In this case please consult us.

Rated output

The rated output P_N is the mechanical power in Watts available at the shaft, and it is specified on the motor name-plate. The active power P_1 is the power in Watts transmitted from the supply to the motor, and it is always bigger than the mechanical power due to losses.

$$P_1 (W) = \sqrt{3} . U . I . \cos \varphi$$

Efficiency is the ratio of the mechanical power to the active power. The efficiency values given at ratings and performance tables are calculated by the method of summation of losses.

The rated outputs tabulated in this catalogue expressed in kW, refer to the mechanical power where motors is running continuously (S1) at rated load, voltage, frequency, at ambient temperature not exceeding +40°C and an altitude of installation up to 1000 m above sea-level.

If standard range F class insulated GAMAK motors are operated at an ambient temperature beyond 40°C and altitude over 1000 m above sea-level, their rated outputs will change at the ratios given below.

Ambient temp.	°C	< 30	30..40	45	50	55	60
Rated output	%	107	100	95	90	85	80

Altitude	m	1000	2000	3000	4000
Rated output	%	100	95	90	80

If ambient temperature and altitude both vary, multiply the rated output with its respective factor to obtain the new permitted output. If the output reduction exceeds 15%, please consult us as the operating characteristics of the motor will become unfavourable due to its low utilisation factor.

At altitudes over 1000 m, the rated output of a motor will remain unchanged if the ambient temperature of 35°C drops by 1.0°C for insulation class F, 1,25°C for insulation class H for every 100 m increment of altitude.

Over-load capacity

No harmful temperature rise will occur, if an excess current of 1.5 times the rated current is applied for 2 min, at intervals of minimum 15 min, to a motor running at thermal equilibrium.

Motors are also capable of withstanding for 15 seconds to a momentary gradually increasing excess torque of 1.6 times their rated torque, when they are running at their rated voltage and frequency.

The size of overloads for longer periods than specified above depends on the size of motor, temperature rise characteristics of motor, period/frequency of overload, and whether overloads take place upon starting when the motor is running cold or at its thermal equilibrium.

Rated torque

The torque transmitted to the motor shaft is :

$$\text{Rater torque (Nm)} = 9550 \frac{\text{Rated output (kW)}}{\text{Rated speed (rpm)}}$$

1 kgf m = 9,81 Nm ≃ 10 Nm

The load-torque of a motor during acceletarion must always be bigger than the opposing torque of the driven machine.

Insulation class

The insulation class of our standard range motors is “F”.

Although the permitted limit of temperature rise for Insulation Class “F” is 105 K by resistance method, the motors are designed to operate within class “B” limit (80 K) which gives longer life and reliability. Furthermore, this gives the ability of withstand ambient temperatures as high as 60°C (upto size 160) and 55°C (size 180 and upwards), or alternatively to overloads upto 15% and 10% respectively, or adverse electrical supply conditions.

Motors of superior Insulation Class H (125 K) may be supplied or request.

The enamelled round copper winding wire used in our standard range of motors are double enamelled (2L) with polyesterimide as base coat (Thermal Class “H” 180°C) plus polyamideimide as top coat. (Thermal class “C” 200°C) IEC 60 317-13.

The windings are impregnated by dipping in class F synthetic resin (polyester) and then they are throughly baked to ensure a high resistance to vibrations and a better heat transfer. The winding insulation of standard production is tropic proof and can thus be used at normal climatic conditions as well as moderately damp locations, and is resistant against aggressive gases, vapour and oils. As an option, motors with increased winding insulation resistant against relative humidity of 95% can be supplied.

Duty types

Duty describes the loads to which the machine is subjected, including starting, electric braking, no-load, rest, de-energized periods, and also their durations and sequence in time.

However, duty type can be continuous, short-time or periodic duty, comprised of one or more loads remaining constant for the duration specified, or a non-periodic duty in which generally, load and speed vary within the permissible operating range.

Electric motors are manufactured for various operating conditions. Standard duty types are classified by IEC 60 034-1.

S1 : Continuous running duty.

Operating at constant load of sufficient duration for thermal equilibrium to be reached.

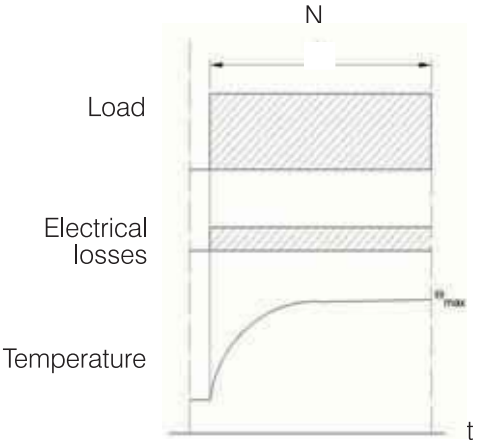

S2 : Short-time duty.

Operation at constant load for a duration that is shorter than the time required to reach thermal equilibrium. After each operation period, the motor has to be de-energized for a sufficient duration until the windings are cooled to ambient temperature. Operation period at constant load can be recommended as 10, 30, 60 and 90 mins.

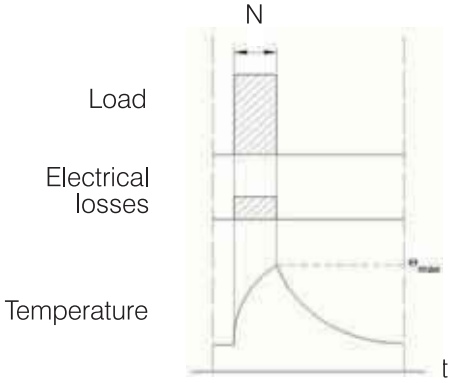

S3 : Intermittent periodic duty.

A sequence of identical duty cycles, each including a period of operation at constant load and a rest and de-energized period. In this type of duty, the cycle is such that the starting current does not significantly effect the temperature rise. Duty cycle is 10 min. unless otherwise agreed. Cyclic duration factor of 15%, 25%, 40% and 60% may be considered.

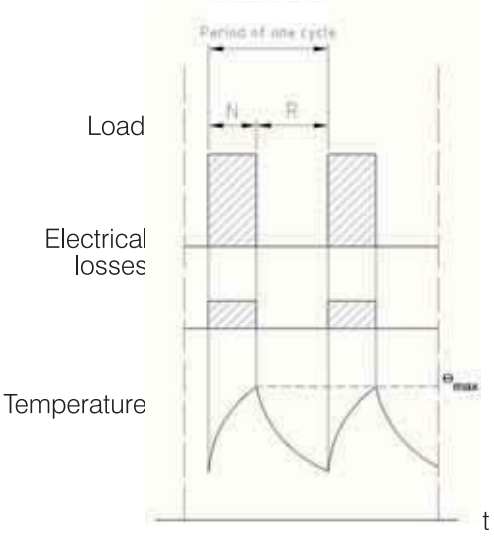

S4 : Intermittent periodic duty with starting.

A sequence of identical duty cycles, each cycle including a significant period of starting, a period of operation at constant load and a rest and de-energized period. In this type of duty the starting current has no significant effect on the temperature rise. The duty cycles are too short for thermal equilibrium. Starting load-torque (N), number of starts per hour, cyclic duration factor and factor of inertia (FI) have to be given.

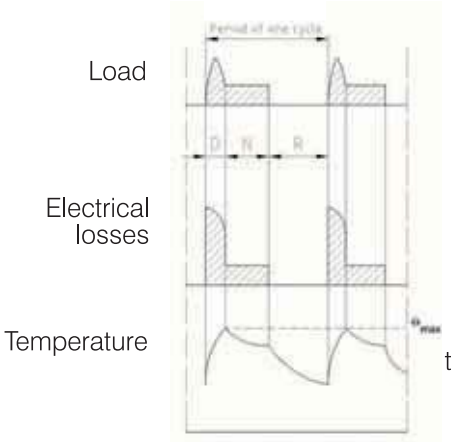

S5 : Intermittent periodic duty with electric braking.

A sequence of identical duty cycles, where each cycle consist of a period of starting, a period of operation at constant load, followed by rapid electric braking and a rest and de-energized period. Starting and braking have influence on temperature rise of windings. Starting/braking load-torque (N), number of starts and braking per hour, cyclic duration factor of inertia (FI) have to be given.

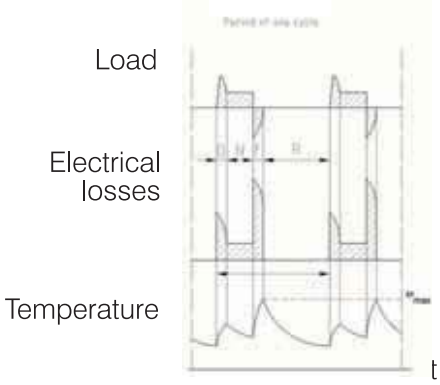

S6 : Continuous-operation periodic duty.

A sequence of identical duty cycles, where each cycle consists of a period of operation at constant load and a period of operation at no-load. There is no rest and de-energized period. The duty cycles are too short for thermal equilibrium to be reached. Duty cycle is 10 min unless otherwise agreed. Cyclic duration factor of 15%, 25%, 40% and 60% may be considered.

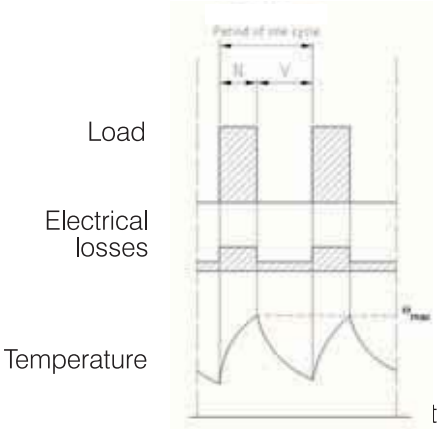

S7 : Continuous-operation periodic duty with electric braking.

A sequence of identical duty cycles, where each cycle consists of a period of starting, a period of operation at constant load and a period of electric braking. There is no rest and de-energized period. The duty cycles are too short for thermal equilibrium to be reached. Load and factor of inertia (FI) at the operating period have to be given.

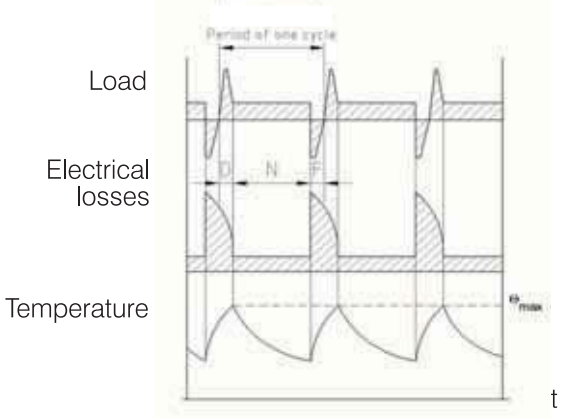

S8 : Continuous-operation periodic duty with related load/speed changes.

A sequence of identical duty cycles, each cycle consisting of a period of operation at constant load corresponding to a predetermined speed of rotation, followed by one or more periods of operation at other constant loads corresponding to different speeds of rotation. There is no rest and de-energized period. Load, cyclic duration factor and factor of inertia (FI) for each speed at the operating period have to be given.

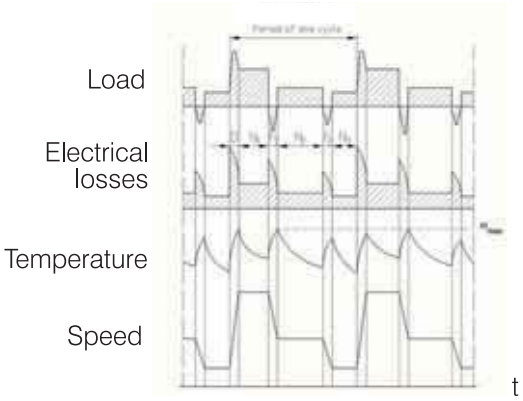

S9 : Duty with non-periodic load and speed variations.

A duty in which generally load and speed are varying non-periodically within the permissible operating range. This duty includes frequently appliad overloads that may greatly exceed the full loads. Load and factor of inertia (FI) for each speed have to be given.

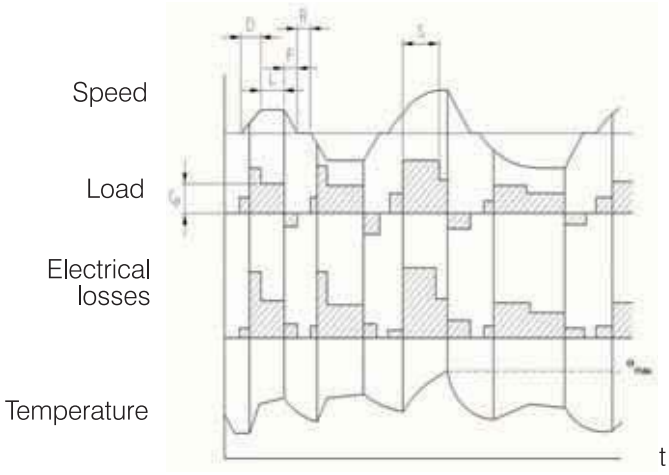

N : Operation time at constant load
L : Operation time at constant load
S : Time under overload

D : Starting/accelerating time
R : Time de-energised and at rest
Cp : Reference load

F : Time of electric braking
V : Operation time at no-load

Cyclic duration factor is the ratio of the period of loading, including starting and electrical braking, to the duration of the duty cycle and is expressed as a percentage.

$$\text{Factor of inertia (FI)} = \frac{J_M / J_Z}{J_M}$$

J_M : Moment of inertia of the motor (kgm^2).

J_Z : Total moment of inertia of driven machine and parts such as couplings, etc., referred to motor shaft (kgm^2).

The nature of braking, whether mechanical or electrical (D.C. or reversed current) has also to be stated.

The ratings and performance data given in this catalogue, are for continuous running at constant load for a sufficient duration to reach thermal equilibrium which correspond to duty type S1.

However, our standard range motors may be operated at all the other duty types, provided that the limit of permissible temperature rise is not exceeded.

Starting frequency

If a cage induction motor is started frequently, the permissible number of starts for a given period of time is limited by the temperature rise of windings during starting. The values of permissible starting frequency per hour at no-load (z_o) are given in the table below for GAMAK motors.

The starting frequency per hour under given operating conditions are calculated according to the following formula:

$$z = \frac{J_M}{J_M + J_z} \cdot \frac{M_M - M_L}{M_M} \cdot \left[1 - \left(\frac{P}{P_N}\right)^2\right] \cdot z_o$$

z : Starting frequency per hour under given operating conditions.
z_o : Starting frequency per hour at no-load (given in the table).
J_M : Moment of inertia of motor (kgm²).
J_z : Total moment of inertia of driven machine and parts such as couplings, etc... referred to motor shaft (kgm²).
M_M: Mean torque value of motor during acceleration (Nm).
M_L : Mean torque value of driven machine during acceleration (Nm).
P_N : Rated motor output (kW).
P : Required load power (kW).

An induction motor is not allowed to be loaded at its rated output P_N if it starts and stops frequently. The permissible motor power is P_N is smaller than the rated output P and is calculated according to the following formula:

$$P = P_N \sqrt{1 - \frac{z}{z_o} \cdot \frac{J_M + J_z}{J_M} \cdot \frac{M_M}{M_M - M_L}}$$

For GAMAK motors, M_M, may be taken as approximately twice the rated motor torque.

An electrical reversal creates approximately 3.5 to 4 times the heating effect, this means that an electric reversal equals about 4 startings. Therefore, the starting frequency may be divided by 4 to obtain the reversal frequency. However when calculating reversal frequency, the load torque M_L should not be taken into consideration.

Permissible starting frequency per hour at no-load (z_o)

Frame size		Motor speed (min^{-1})			
		3000	1500	1000	750
* 56		12200	21000	—	—
63		31000	49000	—	—
71		15700	21700	32000	35000
80		9800	18500	29000	33000
90	S	9400	17500	26600	32000
	L	9100	16800	24500	32000
100	L	6600	11200	14000	19000
112	M	3500	9400	13000	13000
132	S	2200	5100	10000	12300
	M	—	4900	8000	10500
160	M	1100	3100	4200	—
	L	1050	3000	3700	9100
180	M	700	2200	—	—
	L	—	2100	3500	6700
200	L	520	2000	3200	3900
225	S	—	1900	—	—
	M	450	1800	2300	3400
250	M	350	1000	1900	2400
280	S	230	740	1500	1900
	M	210	700	1200	1750
315	S	140	460	840	1050
	M	120	420	700	800
	L	100	370	600	700
355	M	60	180	300	350
	L	50	160	250	300
400	L	**	140	200	250
450	L	**	120	150	200

* Without cooling fan (IC 410, TS 3210 / IEC 60 034-6).

Starting time

To start an induction motor safely, the load torque produced during acceleration must be bigger than the load-torque of the driven machine at every speed value. Especially the starting torque of the motors has to be bigger than the load-torque of the driven machine at rest. For drives requiring high load-torque during acceleration, special rotors may be designed to increase starting torque of motors.

Starting time is an important factor of an electric motor regarding its operating behaviour. As each start increases the temperature of motor windings, the starting time and starting frequency have to be limited to avoid any possible damage. Calculation of starting time is rather complicated but the following formula may be applied as a first approximative.

$$t_a = \frac{(J_M + J_Z) \cdot n}{9{,}55 \cdot (M_M - M_L)}$$

t_a : Starting time (s)
J_M : Moment of inertia of motor (kgm²)
J_Z : Total moment of inertia of the driven machine and parts such as couplings, etc., referred to motor shaft (kgm²)
n : Full-load speed of motor (rpm)
M_M : Mean torque of motor during acceleration (Nm)
M_L : Mean torque of driven machine during acceleration (Nm)

There is no danger in starting up a motor in relation to temperature rise if the starting time obtained by this calculation is less than the value at the below table for GAMAK motors. The permissible starting time depends on whether the motor starts in a cold or thermal equilibrium condition. However, in case the calculated starting time exceeds the permissible value below, either precautions to provide an easier start should be taken, or a more favourable motor having higher starting performance may be preferred.

Generally speaking, a cage-rotor induction motor can consecutively be started 3 times in cold condition and twice at thermal equilibrium at drives where the load-torque rises with the square of speed and its moment of inertia is not excessively high. The motor should be rested (approx. 30 min.) until it has cooled down before re-starting.

Permissible starting time (s) at direct-on-line starting

Frame size	Motor speed (min^{-1})							
	3000		1500		1000		750	
	In cold condition	At thermal equilibrium	In cold condition	At thermal equilibrium	In cold condition	At thermal equilibrium	In cold condition	At thermal equilibrium
56	90	35	180	75	—	—	—	—
63	70	28	100	45	—	—	—	—
71	50	20	75	30	140	55	140	55
80	40	15	60	25	90	35	90	35
90	35	13	50	20	65	25	65	25
100	32	12	40	17	50	20	50	20
112	30	11	35	14	40	16	40	16
132	28	10	30	12	32	13	32	13
160	26	9	27	10	28	10	28	10
180	24	8	25	9	25	9	25	9
200	22	8	23	8	23	9	23	9
225	20	7	21	8	22	8	22	8
250	19	7	20	7	21	8	21	8
280	18	6	19	7	20	7	20	7
315	18	6	18	6	19	7	19	7
355	16	5	16	5	17	6	17	6
400	*	*	14	4	15	5	15	5
450	*	*	14	4	15	5	15	5

Y / Δ Starting time is three times the above given direct-on-line starting values..

* Please consult us for the values.

Terminal connections and starting of motors

Terminal connections and methods of starting of our standard range motors

Number of poles	Output ranges in kW at the rated voltage 400 V, 50 Hz 230 V (Δ) / 400 V (Y)	400 V (Δ)
2 and 4	3 kW and below.	3,7 kW and above.
6	2,2 kW and below.	3 kW and above.
8	1,5 kW and below.	2,2 kW and above.
Methods of starting	Direct-on-line	Direct-on-line, Y / Δ or others

- Other terminal connections, can be provided upon request.

Direct-on-line starting

The simplest way to start a cage induction motor is to connect the mains supply to the motor directly. The only starting equipment required is a direct-on-line starter.

Star/Delta (Y/Δ) Starting

If the starting current of the motor is higher than the limit of the power supply, a star/delta starter can be used. A motor wound 400V (Delta) is started with the winding Star connected. This method reduces the starting current and torque to about 1/3 of the value for direct-on-line starting. In order to limit current and torque surges during swicth-over from Star or Delta, switch-over should not be carried out until the motor reaches at least 90% of its rated speed.

Soft starting

On occassion some motors need to be started smoothly where the starting current is not so important, a suitable soft-starter may be used. A soft-starter permits the starting time to be set for a smooth start and the operation of motor to be monitored continuously so that the voltage can be adjusted according to the demand, minimise the losses. However, the torque characteristic of the motor must conform to the requirements of the driven machine, when a soft-starter is used.

Electric protection of motors

The thermal protection of the stator windings should be chosen as an optimum in respect of the operating conditions. Apart from the use of circuit-breakers with thermally delayed (bi-metal release) over-current protection, motors can also be thermally protected against over-loads by means of thermistors (semiconductor temperature sensors) or thermostat (bi-metal switches) embedded in the winding. Thermal motor protection provides a higher degree of protection because the temperature is monitored in the winding which is the most critical point and independent of outside influences or type of duty etc.

Tolerances (IEC 60 034-1)

— Efficiency (by summation of losses)
  Motors upto 150 kW : $P \leq 150$ kW — $0{,}15\ (1 - \eta)$
  Motors above 150 kW : $P > 150$ kW — $0{,}10\ (1 - \eta)$

— Power factor (cos φ) — $-\dfrac{1 - \cos\varphi}{6}$ minimum 0,02 / maximum 0,07

— Slip (At full-load and working temperature) — ± 20 % of the guaranteed slip
For motors <1 kW, ±30% is permitted

— Locked-rotor current — + 20 % of the guaranteed starting current
(No lower limit)

— Locked-rotor torque — – 15 % + 25 % of the guaranteed torque
(+ 25 % may be exceeded by agreement)

— Breakdown torque — – 10 % of the guaranteed torque except that after allowing for this tolerance, the torque shall not be less than 1.6 times the rated torque.

— Moment of inertia — ± 10 % of the guaranteed value

— Noise-level (Mean sound pressure level) — + 3 dB (A)

EFFICIENCY REGULATION

The efficiency classes specified in IEC 60034-30-1:2014 are as below:

IE4	Super Premium	IEC 60034-30-1:2014 →	0,12-1000 kW 2,4,6 ve 8 pole motors
IE3	Premium Efficiency		
IE2	High Efficiency		
IE1	Standard Efficiency		

Efficiency classification covers 2,4 and 6 pole motors between 0-75 – 375 kW which was mandotary since 2 april 2012 ın Turkey however according to the updates on declaration, starting from 2017 2,4 an 6 pole motors between 0.75 – 375 kW power range must be in IE3 efficiency class and IE2 motors are allowed to be used for only inverter duty applications. This catalogue consists of both IE2 and IE3 efficiency motors.

According to updated declaration in 2015 the efficiency classes will be apply for the below cases too.

• Cases up to 4000 m attitude above sea level, ambient temperature up to 60°C
(the previous directive was covering motors which are based on altitudes up to 1000m above sea level and ambient temperature up to 40°C)

• If Motors completely integrated into a machine (for example pump, fan and compressor) can be tested separately from the machine then motor will be covered by this efficiency rating standard.
(For example motors with special shaft design or motors coupled to gearbox with its own drive end shield)

Methods of testing to determine losses and efficiency ratings of induction motors has been introduced in IEC 60034-2-1:2014. This method is designed to achieve more accurate calculations and measurement for additional losses which stated below;

Test Standard

• Direct Method
• Indirect Method
- Additional losses (P_{LL}), is determined from residual losses measured at different load points.
- Additional losses (P_{LL}), is estimated as approximately 2,5 % -1 % of input power at rated load for motors between 0.1 and 1000 kW
- Additional losses (P_{LL}) is determined with Eh Star method which is an alternative indirect method using mathematical calculation.

The efficiency figures are defined according to the additional losses test results at different load points in indirect test method.

The rating and performance values listed in this catalogue to the indirect method based on IEC 60034-2-1:2014. The additional losses calculated by using exact test measurements from different load points.

STANDARD SERIES - RATINGS AND PERFORMANCE

HIGH EFFICIENCY MOTORS

IE2

3-phase, 400 V, 50 Hz
Duty type : S1 (continuous)
Degree of protection : IP 55
Insulation class : F (155°C)
Temp. Rise : Class B (80K)

2 pole, 3000 min^{-1}

Rated output	Type	Full-load data							Starting data				Breakdown torque ratio	Moment of inertia	Weight approx.
		Speed n	Current I_N	Torque M_N	Power Factor Cos φ	Efficiency η % IEC 60034-2-1:2007			Locked-rotor current ratio I_A/I_N		Locked-rotor torque ratio M_A/M_N		M_K/M_N	J	B3
kW		min^{-1}	A	Nm		At 4/4	At 3/4	At 1/2	D.O.L.	Y/Δ	D.O.L.	Y/Δ		kgm^2	kg

ALUMINIUM HOUSING - 3000 min^{-1}

0,09	AGM 56 2a	2800	0,26	0,31	0,79	63,4	63,1	55,8	4,1	-	2,7	-	2,8	0,00011	2,7
0,12	AGM 56 2b	2800	0,35	0,41	0,77	64,5	64,1	56,9	4,2	-	2,5	-	2,8	0,00012	2,8
0,18	AGM 63 2a	2820	0,50	0,61	0,81	64,4	64,2	57,7	4,6	-	2,9	-	2,9	0,00011	3,6
0,25	AGM 63 2b	2840	0,67	0,84	0,80	67,3	67,1	60,9	4,5	-	2,5	-	2,9	0,00013	4,0
0,37	C.AGM 63 2	2850	1,05	1,24	0,75	68,1	68,1	61,3	5,0	-	2,5	-	2,7	0,00018	4,7
0,37	AGM 71 2a	2800	1,05	1,26	0,74	68,9	68,7	66,7	5,0	-	2,4	-	2,6	0,00026	4,9
0,55	AGM 71 2b	2780	1,27	1,89	0,87	71,6	71,3	70,3	4,5	-	2,4	-	2,6	0,00034	6,0
0,75	C.AGM 71 2	2760	1,75	2,60	0,84	73,2	73,2	72,3	4,5	-	2,2	-	2,4	0,00039	7,0
0,75	AGM2E 80 2a	2860	1,7	2,50	0,82	77,8	77,7	74,6	6,2	-	2,5	-	3,0	0,00053	8,0
1,1	AGM2E 80 2b	2880	2,3	3,65	0,83	80,0	80,0	78,1	6,3	-	2,7	-	3,0	0,00066	8,8
1,5	AGM2E 90 S 2	2880	3,3	4,97	0,80	82,0	82,0	80,1	6,3	-	2,3	-	3,0	0,0011	11,5
2,2	AGM2E 90 L 2	2870	4,45	7,29	0,82	84,5	84,5	83,2	6,6	-	2,6	-	3,1	0,0014	13,9
3	AGM2E 100 L 2	2880	5,8	9,9	0,88	85,3	85,3	84,1	6,0	-	2,5	-	3,0	0,0025	20
4	AGM2E 112 M 2	2880	7,9	13,1	0,85	86,5	86,5	86,0	7,2	2,3	2,8	0,9	3,5	0,0039	21,5
5,5	AGM2E 132 S 2a	2900	10,3	18,1	0,88	87,3	87,3	86,5	6,6	2,0	2,5	0,8	3,0	0,0108	37
7,5	AGM2E 132 S 2b	2910	13,6	24,6	0,90	88,5	88,5	87,9	7,2	2,3	3,0	1,0	3,4	0,014	44
11	AGM2E 160 M 2a	2945	19,5	35,7	0,91	89,5	89,5	88,6	7,7	2,6	3,4	1,1	3,6	0,030	67
15	AGM2E 160 M 2b	2945	28,3	48,6	0,85	90,4	90,4	89,7	7,5	2,4	3,0	1,0	3,5	0,041	81
18,5	AGM2E 160 L 2	2950	32,3	59,9	0,91	90,9	90,8	90,1	7,7	2,6	2,5	0,8	3,0	0,048	102
22	AGM2E 180 M 2	2950	38,3	71,2	0,91	91,3	91,3	90,8	8,2	2,6	3,0	1,0	3,5	0,066	135
30	AGM2E 200 L 2a	2970	52	96	0,91	92,0	92,0	91,2	8,3	2,7	2,7	0,9	3,0	0,13	160
37	AGM2E 200 L 2b	2970	65	119	0,89	92,6	92,6	91,7	8,3	2,7	2,7	0,9	3,0	0,15	190

Efficiencies are calculated according to indirect method where the additional load losses are determined from exact measurements at different load points. (IEC 60034-2-1 : 2014)

HIGH EFFICIENCY MOTORS

IE2

3-phase, 400 V, 50 Hz
Duty type : S1 (continuous)
Degree of protection : IP 55
Insulation class : F (155ºC)
Temp. Rise : Class B (80K)

2 pole, 3000 min^{-1}

Rated output	Type	Full-load data							Starting data				Breakdown torque ratio	Moment of inertia	Weight approx.
		Speed n	Current I_N	Torque M_N	Power Factor Cos φ	Efficiency η % IEC 60034-2-1:2007			Locked-rotor current ratio I_A/I_N		Locked-rotor torque ratio M_A/M_N		M_K/M_N	J	B3
kW		min^{-1}	A	Nm		At 4/4	At 3/4	At 1/2	D.O.L.	Y/Δ	D.O.L.	Y/Δ		kgm^2	kg

CAST IRON HOUSING - 3000 min^{-1}

5,5	GM2E 132 S 2a	2900	10,3	18,1	0,88	87,3	87,3	86,5	7,3	2,4	2,8	0,9	3,5	0,0108	49
7,5	GM2E 132 S 2b	2910	13,6	24,6	0,90	88,5	88,5	87,9	7,2	2,3	3,0	1,0	3,4	0,014	56
11	GM2E 160 M 2a	2945	19,5	35,7	0,91	89,5	89,5	88,6	7,7	2,6	3,4	1,1	3,6	0,03	100
15	GM2E 160 M 2b	2945	28,5	48,6	0,85	90,4	90,4	89,7	7,5	2,4	3,0	1,0	3,5	0,041	113
18,5	GM2E 160 L 2	2950	32,3	59,9	0,91	90,9	90,8	90,1	7,7	2,6	2,5	0,8	3,0	0,048	135
22	GM2E 180 M 2	2950	38,3	71,2	0,91	91,3	91,3	90,8	8,2	2,6	3,0	1,0	3,5	0,066	158
30	GM2E 200 L 2a	2970	52	96	0,91	92,0	92,0	91,2	8,3	2,7	2,7	0,9	3,0	0,13	210
37	GM2E 200 L 2b	2970	65	119	0,89	92,6	92,6	91,7	8,3	2,7	2,7	0,9	3,0	0,15	240
45	GM2E 225 M 2	2975	77	144	0,91	92,9	93,0	91,8	8,0	2,7	2,4	0,8	2,9	0,23	343
55	GM2E 250 M 2	2980	94	176	0,91	93,2	93,7	92,2	7,6	2,5	2,6	0,8	2,7	0,41	445
75	GM2E 280 S 2	2980	127	240	0,91	93,9	94,1	92,5	7,0	2,6	2,4	0,8	2,5	0,53	512
90	GM2E 280 M 2	2980	151	288	0,91	94,2	94,2	92,7	8,5	2,7	2,7	0,9	3,0	0,62	585
110	GM2E 315 S 2	2980	192	353	0,88	94,3	94,3	92,8	7,0	2,3	2,5	0,8	3,0	1,0	675
132	GM2E 315 M 2a	2980	224	423	0,90	94,6	94,5	92,9	8,0	2,6	2,5	0,8	3,0	1,2	742
160	GM2E 315 M 2b	2980	266	513	0,92	94,8	94,8	93,4	7,8	2,6	2,5	0,8	3,2	1,4	812
185	GMM2E 315 L 2a	2980	307	593	0,92	95,0	95,0	93,6	8,0	2,6	2,5	0,8	3,0	1,5	912
200	GMM2E 315 L 2b	2980	330	641	0,92	95,0	95,0	93,6	8,0	2,6	2,5	0,8	3,0	1,5	912
250	GMM2E 355 M 2a	2980	420	801	0,90	95,0	95,0	93,6	8,0	2,6	2,0	0,6	2,3	3,3	1170
315	GMM2E 355 M 2b	2980	530	1009	0,90	95,1	95,1	93,7	8,0	2,6	2,0	0,6	2,3	4,1	1300
355	GMM2E 355 M 2c	2980	600	1138	0,90	95,2	95,2	93,8	8,0	2,6	2,0	0,6	2,3	4,5	1360
400	GMM2E 355 L 2a	2980	670	1282	0,90	95,2	95,2	93,8	8,0	2,6	2,0	0,6	2,3	4,7	1520
450	GMM 355 L 2b	2980	750	1442	0,91	95,2	95,2	93,8	7,0	2,3	2,0	0,6	2,6	5,3	1630
500	GMM 355 L 2c	2980	830	1602	0,91	95,2	95,2	93,8	7,0	2,3	2,0	0,6	2,6	5,9	1740
450	GMM 400 L 2a	2985	741	1440	0,92	95,3	95,3	93,9	7,0	2,3	1,5	0,5	2,2	7,1	2210
500	GMM 400 L 2b	2985	822	1600	0,92	95,4	95,4	93,9	7,0	2,3	1,5	0,5	2,2	7,9	2450
560	GMM 400 L 2c	2985	907	1792	0,93	95,9	95,9	94,3	7,0	2,3	1,5	0,5	2,2	8,8	2600
630	GMM 400 L 2d	2985	1017	2016	0,93	95,9	95,9	94,3	7,0	2,3	1,5	0,5	2,2	9,9	2820
710	GMM 400 L 2e	2985	675*	2272	0,92	96,0	96,0	94,4	7,0	2,3	1,5	0,5	2,2	11,2	3000
800	GMM 450 L 2a	2986	760*	2559	0,92	96,0	96,0	94,4	7,0	2,3	1,0	0,3	2,8	21	3600
900	GMM 450 L 2b	2986	842*	2878	0,93	96,1	96,1	94,5	7,0	2,3	1,0	0,3	2,8	23	3800
1000	GMM 450 L 2c	2986	923*	3198	0,94	96,2	96,2	94,5	7,0	2,3	1,0	0,3	2,8	26	4000

* Rated current at 690V.

Efficiencies are calculated according to indirect method where the additional load losses are determined from exact measurements at different load points. (IEC 60034-2-1 : 2014)

STANDARD SERIES - RATINGS AND PERFORMANCE

HIGH EFFICIENCY MOTORS

IE2

3-phase, 400 V, 50 Hz
Duty type : S1 (continuous)
Degree of protection : IP 55
Insulation class : F (155ºC)
Temp. Rise : Class B (80K)

4 pole, 1500 min^{-1}

Rated output	Type	Full-load data							Starting data				Breakdown torque ratio	Moment of inertia	Weight approx.
		Speed n	Current I_N	Torque M_N	Power Factor Cos φ	Efficiency η % IEC 60034-2-1:2007			Locked-rotor current ratio I_A/I_N		Locked-rotor torque ratio M_A/M_N		M_K/M_N	J	B3
kW		min^{-1}	A	Nm		At 4/4	At 3/4	At 1/2	D.O.L.	Y/Δ	D.O.L.	Y/Δ		kgm^2	kg

ALUMINIUM HOUSING - 1500 min^{-1}

0,06	AGM 56 4a	1370	0,25	0,42	0,61	56,9	56,8	52,2	3,0	-	2,4	-	2,6	0,00011	2,6
0,09	AGM 56 4b	1375	0,36	0,63	0,58	62,5	62,3	55,1	3,1	-	2,2	-	2,4	0,00012	2,8
0,12	AGM 63 4a	1365	0,41	0,84	0,74	57,1	57,1	53,3	3,1	-	2,0	-	2,2	0,00017	3,4
0,18	AGM 63 4b	1340	0,60	1,28	0,73	59,7	59,7	55,8	2,9	-	2,0	-	2,0	0,00021	3,9
0,25	C.AGM 63 4	1350	0,95	1,77	0,63	60,7	60,7	56,8	3,0	-	2,0	-	2,0	0,00026	4,5
0,25	AGM 71 4a	1380	0,81	1,73	0,72	61,9	61,8	58,2	2,9	-	1,8	-	2,2	0,00040	4,9
0,37	AGM 71 4b	1390	1,15	2,54	0,68	68,1	68,1	67,1	3,7	-	2,2	-	2,5	0,00054	5,8
0,55	C.AGM 71 4	1385	1,50	3,75	0,75	68,6	68,6	67,6	3,4	-	1,9	-	2,1	0,00062	6,4
0,55	AGM 80 4a	1365	1,60	3,85	0,72	69,1	69,0	65,2	3,5	-	1,9	-	2,0	0,00083	7,5
0,75	AGM2E 80 4b	1410	2,10	5,08	0,65	79,6	79,6	77,6	5,0	-	2,6	-	2,8	0,0014	10,4
1,1	AGM2E 90 S 4	1420	2,60	7,39	0,75	82,0	82,0	80,5	5,5	-	3,0	-	3,3	0,0022	12,5
1,5	AGM2E 90 L 4	1430	3,50	10,02	0,75	83,0	83,0	81,5	5,9	-	3,3	-	3,5	0,0030	15,5
2,2	AGM2E 100 L 4a	1435	5,0	14,6	0,75	84,5	84,6	82,5	5,9	-	2,9	-	3,4	0,0044	17,5
3	AGM2E 100 L 4b	1435	6,6	20	0,77	85,5	85,7	84,0	6,2	-	2,9	-	3,4	0,0057	24
4	AGM2E 112 M 4	1440	8,4	26,3	0,81	86,7	86,8	85,3	6,6	2,1	2,5	0,8	3,3	0,0106	30
5,5	AGM2E 132 S 4	1465	11,2	35,9	0,81	87,9	88,8	87,2	7,0	2,3	2,8	0,9	3,5	0,021	41
7,5	AGM2E 132 M 4	1465	15,4	48,9	0,79	89,0	89,1	88,1	7,1	2,3	2,7	0,9	3,4	0,026	48
11	AGM2E 160 M 4	1465	21,3	71,7	0,83	90,0	90,1	89,3	6,9	2,2	2,8	0,9	3,1	0,067	85
15	AGM2E 160 L 4	1465	29,4	97,8	0,82	90,6	90,7	89,7	7,5	2,4	2,6	0,8	3,5	0,088	105
18,5	AGM2E 180 M 4	1470	34,5	120	0,85	91,3	91,4	90,4	7,7	2,5	3,2	1,0	3,4	0,13	145
22	AGM2E 180 L 4	1470	42,5	143	0,82	91,7	91,4	90,6	8,3	2,7	3,7	1,2	3,8	0,15	160
30	AGM2E 200 L 4	1470	55	195	0,85	92,5	92,6	92,1	8,0	2,6	3,1	1,0	3,6	0,22	175

Efficiencies are calculated according to indirect method where the additional load losses are determined from exact measurements at different load points. (IEC 60034-2-1 : 2014)

HIGH EFFICIENCY MOTORS

IE2 3-phase, 400 V, 50 Hz
Duty type : S1 (continuous)
Degree of protection : IP 55
Insulation class : F (155°C)
Temp. Rise : Class B (80K)

4 pole, 1500 min^{-1}

Rated output	Type	Full-load data							Starting data				Breakdown torque ratio	Moment of inertia	Weight approx.
		Speed n	Current I_N	Torque M_N	Power Factor Cos φ	Efficiency η % IEC 60034-2-1:2007			Locked-rotor current ratio I_A/I_N		Locked-rotor torque ratio M_A/M_N		M_K/M_N	J	B3
kW		min^{-1}	A	Nm		At 4/4	At 3/4	At 1/2	D.O.L.	Y/Δ	D.O.L.	Y/Δ		kgm^2	kg

CAST IRON HOUSING - 1500 min^{-1}

5,5	GM2E 132 S 4	1465	11,2	35,9	0,81	87,9	88,0	87,2	7,0	2,3	2,8	0,9	3,5	0,021	53
7,5	GM2E 132 M 4	1465	15,4	48,9	0,79	89,0	89,1	88,1	7,1	2,3	2,7	0,9	3,4	0,026	61
11	GM2E 160 M 4	1465	21,3	71,7	0,83	90,0	90,1	89,3	6,9	2,2	2,8	0,9	3,1	0,067	115
15	GM2E 160 L 4	1465	29,4	97,8	0,82	90,6	90,7	89,7	7,5	2,4	2,6	0,8	3,5	0,088	135
18,5	GM2E 180 M 4	1470	34,5	120	0,85	91,3	91,4	90,4	7,7	2,5	3,2	1,0	3,4	0,13	165
22	GM2E 180 L 4	1470	42,5	143	0,82	91,7	91,7	90,6	8,3	2,7	3,7	1,2	3,8	0,15	180
30	GM2E 200 L 4	1470	55	195	0,85	92,5	92,6	92,1	8,0	2,6	3,1	1,0	3,6	0,22	225
37	GM2E 225 S 4	1470	67	240	0,86	92,7	92,7	92,2	7,2	2,3	3,0	1,0	3,0	0,30	314
45	GM2E 225 M 4	1470	80	292	0,87	93,3	93,3	92,4	7,3	2,4	3,0	1,0	3,0	0,36	330
55	GM2E 250 M 4	1475	96	356	0,88	93,7	93,8	93,2	7,6	2,5	3,1	1,0	2,9	0,72	420
75	GM2E 280 S 4	1480	133	484	0,87	94,0	94,1	93,4	7,0	2,3	2,6	0,8	2,8	0,96	550
90	GM2E 280 M 4	1480	158	581	0,87	94,3	94,5	93,8	7,4	2,4	2,9	0,9	3,0	1,15	615
110	GM2E 315 S 4	1485	195	707	0,86	94,5	94,5	93,8	7,4	2,4	2,0	0,7	3,0	2,1	784
132	GM2E 315 M 4a	1485	230	849	0,87	94,7	94,5	93,8	7,4	2,4	2,1	0,7	3,0	2,5	861
160	GM2E 315 M 4b	1485	280	1029	0,87	94,9	94,9	94,0	7,0	2,3	2,0	0,6	2,9	2,8	882
185	GMM2E 315 L 4a	1485	323	1190	0,87	95,1	95,1	94,2	7,4	2,4	2,2	0,7	3,0	2,9	962
200	GMM2E 315 L 4b	1485	350	1286	0,87	95,1	95,1	94,2	8,0	2,6	2,5	0,7	3,0	3,1	1015
250	GMM2E 355 M 4a	1485	445	1608	0,85	95,1	95,1	94,2	6,4	2,1	2,1	0,6	2,8	5,5	1378
315	GMM2E 355 M 4b	1487	560	2023	0,85	95,5	95,4	94,2	6,4	2,1	2,0	0,6	2,8	6,0	1400
355	GMM2E 355 M 4c	1489	630	2278	0,85	95,5	95,4	94,3	7,0	2,3	2,0	0,6	2,8	6,5	1438
400	GMM2E 355 L 4a	1488	710	2567	0,85	95,5	95,4	94,3	7,0	2,3	2,0	0,6	2,8	7,2	1639
450	GMM 355 L 4b	1488	800	2888	0,85	95,5	95,4	94,5	7,0	2,3	2,5	0,8	2,6	8,2	1740
500	GMM 355 L 4c	1488	890	3209	0,85	95,5	95,4	94,5	7,0	2,3	2,4	0,8	2,6	9,1	1850
450	GMM 400 L 4a	1491	770	2882	0,88	95,6	95,6	94,8	7,0	2,3	1,9	0,6	2,6	14,7	2335
500	GMM 400 L 4b	1492	860	3200	0,88	95,6	95,6	94,8	7,0	2,3	1,9	0,6	2,6	16,9	2474
560	GMM 400 L 4c	1492	970	3584	0,87	95,6	95,6	95,1	7,0	2,3	1,5	0,6	2,6	20	2745
630	GMM 400 L 4d	1492	1090	4033	0,87	95,6	95,6	95,1	7,2	2,4	2,0	0,6	2,8	21,3	2814
710	GMM 400 L 4e	1492	710*	4545	0,87	96,0	96,0	95,2	7,2	2,4	2,0	0,6	2,3	23,8	3055
800	GMM 450 L 4a	1492	784*	5121	0,89	96,2	96,2	95,3	7,0	2,3	1,8	0,6	2,5	28	3700
900	GMM 450 L 4b	1492	880*	5761	0,89	96,3	96,3	95,3	7,0	2,3	1,8	0,6	2,5	32	3900
1000	GMM 450 L 4c	1492	976*	6401	0,89	96,4	96,4	95,3	7,0	2,3	1,8	0,6	2,5	35	4100

* Rated current at 690V.

Efficiencies are calculated according to indirect method where the additional load losses are determined from exact measurements at different load points. (IEC 60034-2-1 : 2014)

STANDARD SERIES - RATINGS AND PERFORMANCE

HIGH EFFICIENCY MOTORS

IE2

3-phase, 400 V, 50 Hz
Duty type : S1 (continuous)
Degree of protection : IP 55
Insulation class : F (155ºC)
Temp. Rise : Class B (80K)

6 pole, 1000 min^{-1}

Rated output	Type	Full-load data							Starting data				Breakdown torque ratio	Moment of inertia	Weight approx.
		Speed n	Current I_N	Torque M_N	Power Factor Cos φ	Efficiency η % IEC 60034-2-1:2007 At 4/4	At 3/4	At 1/2	Locked-rotor current ratio I_A/I_N D.O.L.	Y/Δ	Locked-rotor torque ratio M_A/M_N D.O.L.	Y/Δ	M_K/M_N	J	B3
kW		min^{-1}	A	Nm										kgm^2	kg
ALUMINIUM HOUSING - 1000 min^{-1}															
0,18	AGM 71 6a	915	0,61	1,88	0,68	63,0	62,9	58,7	3,2	-	1,7	-	2,1	0,00064	5,0
0,25	AGM 71 6b	915	0,83	2,61	0,68	63,8	63,7	59,6	3,2	-	1,7	-	2,1	0,00086	5,7
0,37	AGM 80 6a	910	1,1	3,88	0,67	72,9	72,8	70,1	3,6	-	2,1	-	2,4	0,0017	8,1
0,55	AGM 80 6b	890	1,5	5,90	0,75	70,4	70,3	68,2	3,5	-	1,9	-	2,0	0,0022	9,4
0,75	AGM2E 90 S 6	920	2	7,79	0,71	75,9	75,9	72,4	4,0	-	2,2	-	2,4	0,0034	12,2
1,1	AGM2E 90 L 6	930	2,9	11,3	0,70	78,1	78,1	75,1	4,0	-	2,2	-	2,4	0,0044	14
1,5	AGM2E 100 L 6	945	3,6	15,2	0,75	79,8	79,7	76,4	4,5	-	2,2	-	2,4	0,0077	19,1
2,2	AGM2E 112 M 6	950	5,4	22	0,72	81,8	81,7	78,5	4,7	-	2,2	-	2,5	0,013	26,5
3	AGM2E 132 S 6	960	6,9	29,8	0,75	83,3	83,2	80,4	5,0	1,6	2,2	0,7	2,6	0,028	44
4	AGM2E 132 M 6a	960	9,0	39,8	0,76	84,6	84,5	81,6	5,0	1,6	2,2	0,7	2,6	0,037	49
5,5	AGM2E 132 M 6b	960	12,3	54,7	0,75	86,0	86,0	83,1	5,0	1,6	2,2	0,7	2,6	0,060	62
7,5	AGM2E 160 M 6	960	15	74,6	0,83	87,2	87,2	84,5	6,5	2,1	2,5	0,8	3,0	0,08	75
15	AGM2E 180 L 6	965	29	148	0,83	89,7	89,7	86,8	6,5	2,1	2,4	0,8	3,0	0,20	165
18,5	AGM2E 200 L 6a	975	38	182	0,78	90,4	90,4	87,7	7,0	2,3	2,5	0,8	3,0	0,21	168
22	AGM2E 200 L 6b	970	43	216,5	0,81	91,1	91,1	88,4	7,0	2,3	2,5	0,8	3,0	0,26	185
CAST IRON HOUSING - 1000 min^{-1}															
3	GM2E 132 S 6	960	6,9	29,8	0,75	83,3	83,2	80,4	5,0	1,6	2,2	0,7	2,6	0,028	56
4	GM2E 132 M 6a	960	9,0	39,8	0,76	84,6	84,5	81,6	5,0	1,6	2,2	0,7	2,6	0,037	62
5,5	GM2E 132 M 6b	960	12,3	54,7	0,75	86,0	86,0	83,1	5,0	1,6	2,2	0,7	2,6	0,06	75
7,5	GM2E 160 M 6	960	15	74,6	0,83	87,2	87,2	84,5	6,5	2,1	2,5	0,8	3,0	0,08	105
11	GM2E 160 L 6	965	22	108,9	0,81	88,7	88,7	85,7	6,5	2,1	2,5	0,8	3,0	0,12	132
15	GM2E 180 L 6	965	29	148	0,83	89,7	89,7	86,8	6,5	2,1	2,4	0,8	3,0	0,20	189
18,5	GM2E 200 L 6a	975	38	182	0,78	90,4	90,4	87,7	7,0	2,3	2,5	0,8	3,0	0,21	202
22	GM2E 200 L 6b	970	43	216,5	0,81	91,1	91,1	88,4	7,0	2,3	2,5	0,8	3,0	0,26	222
30	GM2E 225 M 6	980	58	292	0,81	91,7	91,7	89,6	7,0	2,3	3,0	1,0	2,6	0,57	285
37	GM2E 250 M 6	985	69	359	0,84	92,2	92,2	90,1	7,0	2,3	3,0	1,0	2,6	0,77	380
45	GM2E 280 S 6	985	92	436	0,76	92,7	92,7	90,9	7,0	2,3	3,3	1,1	2,6	1,2	500
55	GM2E 280 M 6	985	107	533	0,80	93,1	93,1	91,5	7,0	2,3	3,3	1,1	2,6	1,5	553
75	GM2E 315 S 6	990	139	723	0,83	93,7	93,7	92,4	7,0	2,3	2,0	0,6	2,5	2,4	727
90	GM2E 315 M 6a	990	166	868	0,83	94,0	94,0	92,6	7,0	2,3	2,0	0,6	2,5	2,9	805
110	GM2E 315 M 6b	990	198	1061	0,85	94,3	94,3	92,7	7,0	2,3	2,0	0,6	2,6	3,5	860
132	GMM2E 315 L 6a	990	237	1273	0,85	94,6	94,6	93,0	7,0	2,3	2,3	0,8	3,0	3,6	1020
160	GMM2E 315 L 6b	990	290	1543	0,84	94,8	94,8	93,2	7,0	2,3	2,3	0,8	2,7	4,2	1120
160	GMM2E 355 M 6a	990	305	1543	0,80	94,8	94,8	93,2	7,0	2,3	2,5	0,8	2,4	5,8	1035
200	GMM2E 355 M 6b	990	380	1929	0,80	95,0	95,0	93,5	7,0	2,3	2,5	0,8	2,4	6,8	1185
250	GMM2E 355 M 6c	990	470	2412	0,81	95,0	95,0	93,5	7,0	2,3	2,5	0,8	2,4	8,3	1390
315	GMM2E 355 L 6a	990	580	3039	0,82	95,0	95,0	93,5	7,0	2,3	2,5	0,8	2,4	10,7	1746
355	GMM2E 355 L 6b	990	650	3424	0,83	95,0	95,0	93,5	7,0	2,3	2,5	0,8	2,4	11,7	1890
355	GMM2E 400 L 6a	993	655	3414	0,82	95,4	95,0	93,5	7,0	2,3	2,0	0,6	2,6	19,6	2250
400	GMM2E 400 L 6b	993	740	3847	0,82	95,4	95,0	93,5	7,0	2,3	2,0	0,6	2,6	24,5	2575
450	GMM 400 L 6c	993	840	4328	0,81	95,4	95,4	93,9	6,5	2,1	1,8	0,6	2,6	26,6	2705
500	GMM 400 L 6d	993	920	4809	0,82	95,4	95,4	93,9	7,0	2,3	1,8	0,6	2,6	29,2	2855
560	GMM 400 L 6e	993	1010	5386	0,84	95,6	95,6	94,1	7,0	2,3	1,8	0,6	2,6	32,2	3030
630	GMM 450 L 6a	993	631*	6059	0,87	95,7	95,7	94,1	6,6	2,1	1,9	0,6	2,5	37,0	3800
710	GMM 450 L 6b	993	713*	6828	0,87	95,8	95,8	94,2	6,6	2,1	1,9	0,6	2,5	41,0	4000
800	GMM 450 L 6c	993	794*	7694	0,88	96,0	96,0	94,4	6,6	2,1	1,9	0,6	2,5	46,0	4200

* Rated current at 690V.

Efficiencies are calculated according to indirect method where the additional load losses are determined from exact measurements at different load points.

3-phase, 400 V, 50 Hz
Duty type : S1 (continuous)
Degree of protection : IP 55
Insulation class : F (155°C)
Temp. Rise : Class B (80K)

8 pole, 750 min^{-1}

Rated output	Type	Full-load data							Starting data				Breakdown torque ratio	Moment of inertia	Weight approx.
		Speed n	Current I_N	Torque M_N	Power Factor Cos φ	Efficiency η % IEC 60034-2-1:2007			Locked-rotor current ratio I_A/I_N		Locked-rotor torque ratio M_A/M_N		M_K/M_N	J	B3
kW		min^{-1}	A	Nm		At 4/4	At 3/4	At 1/2	D.O.L.	Y/Δ	D.O.L.	Y/Δ		kgm^2	kg
ALUMINIUM HOUSING - 750 min^{-1}															
0,09	AGM 71 8a	690	0,41	1,25	0,56	56,5	56,5	47,4	2,3	-	1,7	-	1,9	0,00064	5,0
0,12	AGM 71 8b	670	0,60	1,71	0,51	56,7	56,7	47,7	2,2	-	1,9	-	2	0,00086	5,7
0,18	AGM 80 8a	695	0,90	2,47	0,48	60,3	60,3	54,7	3	-	2,8	-	3	0,0017	8,1
0,25	AGM 80 8b	680	1,14	3,51	0,50	63,0	63,0	57,6	2,9	-	2,6	-	2,8	0,0022	9,4
0,37	AGM 90 S 8	690	1,33	5,12	0,60	66,7	66,7	61,5	3,2	-	1,8	-	2	0,0029	11,3
0,55	AGM 90 L 8	670	1,82	7,84	0,63	69,6	69,6	64,6	3	-	1,4	-	1,7	0,0038	13,3
0,75	AGM 100 L 8a	700	2,40	10,23	0,63	72,2	72,2	67,3	3,4	-	1,8	-	2,1	0,0062	17,4
1,1	AGM 100 L 8b	700	3,30	15,4	0,67	72,2	72,2	67,4	3,2	-	1,7	-	1,8	0,0084	19,1
1,5	AGM 112 M 8	700	4,40	20,5	0,65	75,8	75,7	71,7	3,6	-	1,9	-	2,2	0,013	21,5
2,2	AGM 132 S 8	700	5,40	30	0,76	77,2	77,1	73,1	3,8	1,2	2,1	0,7	2,4	0,024	32
3	AGM 132 M 8	690	7,30	41,5	0,76	78,1	78,0	74,2	3,6	1,2	2,2	0,7	2,2	0,033	40
4	AGM 160 M 8a	710	9,10	53,8	0,77	82,2	82,2	79,3	4,8	1,5	2,1	0,7	2,4	0,060	63
5,5	AGM 160 M 8b	720	12,5	73	0,77	82,6	82,6	79,6	5,3	1,7	2,2	0,7	2,7	0,083	73
7,5	AGM 160 L 8	715	17	100	0,75	84,6	84,6	81,5	5,8	1,9	2,4	0,8	2,9	0,120	102
11	AGM 180 L 8	720	24	146	0,78	85,2	85,2	82,1	6,8	2,2	2,7	0,9	3	0,20	138
15	AGM 200 L 8	725	32	198	0,79	87,2	87,2	84,2	6	1,9	2,1	0,7	2,9	0,29	155
CAST IRON HOUSING - 750 min^{-1}															
2,2	GM 132 S 8	700	5,4	30	0,76	77,2	77,1	73,1	3,8	1,2	2,1	0,7	2,4	0,024	47
3	GM 132 M 8	690	7,3	41,5	0,76	78,1	78,0	74,2	3,6	1,2	2,2	0,7	2,2	0,033	56
4	GM 160 M 8a	710	9,1	53,8	0,77	82,2	82,2	79,3	4,8	1,5	2,1	0,7	2,4	0,060	84
5,5	GM 160 M 8b	720	12,5	73	0,77	82,6	82,6	79,6	5,3	1,7	2,2	0,7	2,7	0,083	98
7,5	GM 160 L 8	715	17	100	0,75	84,6	84,6	81,5	5,8	1,9	2,4	0,8	2,9	0,120	120
11	GM 180 L 8	720	24	146	0,78	85,2	85,2	82,1	6,8	2,2	2,7	0,9	2,0	0,20	164
15	GM 200 L 8	725	32	198	0,79	87,2	87,2	84,2	6,0	1,9	2,1	0,7	2,9	0,29	205
18,5	GM 225 S 8	725	38	244	0,81	88,0	88,0	85,1	5,8	1,9	2,0	0,6	2,7	0,43	250
22	GM 225 M 8	725	45	290	0,81	87,1	87,1	84,8	5,8	1,9	2,0	0,6	2,6	0,52	277
30	GM 250 M 8	735	59	390	0,82	89,8	89,8	86,2	6,1	2,0	1,8	0,6	2,6	0,92	383
37	GM 280 S 8	730	73	484	0,82	89,8	89,8	86,2	4,7	1,5	2,0	0,6	2,0	1,3	465
45	GM 280 M 8	730	86	589	0,83	91,4	91,4	87,4	4,9	1,6	1,9	0,6	1,8	1,6	508
55	GM 315 S 8	740	105	710	0,82	92,2	91,4	87,4	5,7	1,8	1,8	0,6	1,9	2	708
75	GM 315 M 8a	740	145	968	0,82	91,3	91,3	87,4	5,9	1,9	1,9	0,6	2,0	2,5	745
90	GM 315 M 8b	740	171	1161	0,82	92,2	92,2	88,6	6,2	2,0	1,9	0,6	2,0	3	820
110	GMM 315 L 8a	740	209	1420	0,82	92,6	92,6	89,1	6,5	2,1	1,9	0,6	2,0	4	860
132	GMM 315 L 8b	740	262	1704	0,78	93,1	93,1	89,8	6,0	1,9	1,9	0,6	2,0	4,3	980
132	GMM 355 M 8a	740	260	1704	0,79	93,1	93,1	89,8	5,7	1,8	1,9	0,6	2,0	4,3	1222
160	GMM 355 M 8b	740	309	2065	0,80	93,3	93,3	90,2	5,9	1,9	1,9	0,6	2,0	8,9	1328
200	GMM 355 M 8c	740	420	2581	0,80	93,4	93,4	90,3	6,2	2,0	1,9	0,6	2,0	11	1590
250	GMM 355 L 8	740	475	3226	0,81	93,5	93,5	90,4	6,5	2,1	1,9	0,6	2,0	13	2020
315	GMM 400 L 8a	745	618	4038	0,78	94,8	94,8	91,7	5,9	1,9	1,8	0,6	2,3	24,5	2555
355	GMM 400 L 8b	745	701	4551	0,77	95,0	95,0	91,9	6,0	1,9	1,8	0,6	2,3	26,6	2685
400	GMM 400 L 8c	745	803	5128	0,76	95,2	95,2	92,0	6,1	2,0	1,8	0,6	2,4	29	2835
450	GMM 400 L 8d	745	914	5768	0,75	95,2	95,2	92,0	6,2	2,0	1,8	0,6	2,5	32	3010
500	GMM 450 L 8a	744	541*	6418	0,81	95,3	95,3	92,1	6,6	2,1	2,0	0,6	2,4	37	3800
560	GMM 450 L 8b	744	603*	7188	0,81	95,4	95,4	92,2	6,6	2,1	2,0	0,6	2,4	41	4000
630	GMM 450 L 8c	744	675*	8087	0,82	95,4	95,4	92,2	6,6	2,1	2,0	0,6	2,4	46	4200

* Rated current at 690V.

Efficiencies are calculated according to indirect method where the additional load losses are determined from exact measurements at different load points. (IEC 60034-2-1 : 2014)

STANDARD SERIES - RATINGS AND PERFORMANCE

PREMIUM EFFICIENCY MOTORS

IE3

3-phase, 400 V, 50 Hz
Duty type : S1 (continuous)
Degree of protection : IP 55
Insulation class : F (155°C)
Temp. Rise : Class B (80K)

2 pole, 3000 min^{-1}

Rated output	Type	Full-load data							Starting data				Breakdown torque ratio	Moment of inertia	Weight approx.
		Speed n	Current I_N	Torque M_N	Power Factor Cos φ	Efficiency η % IEC 60034-2-1:2007			Locked-rotor current ratio I_A/I_N		Locked-rotor torque ratio M_A/M_N		M_K/M_N	J	B3
kW		min^{-1}	A	Nm		At 4/4	At 3/4	At 1/2	D.O.L.	Y/Δ	D.O.L.	Y/Δ		kgm^2	kg

ALUMINIUM HOUSING - 3000 min^{-1}

0,75	AGM3E 80 2a	2880	1,6	2,49	0,84	80,7	80,6	78,5	6,2	-	2,5	-	3,2	0,00066	8,8
1,1	AGM3E 80 2b	2900	2,3	3,62	0,83	82,7	82,5	80,6	5,9	-	2,6	-	3,7	0,00080	10,4
1,5	AGM3E 90 S 2	2900	3,30	4,94	0,78	84,2	84,0	82,5	6,3	-	3,1	-	3,7	0,0014	13,5
2,2	AGM3E 90 L 2	2900	4,45	7,24	0,83	85,9	85,4	85,0	6,6	-	2,9	-	3,5	0,0017	16
3	AGM3E 100 L 2	2900	5,8	9,9	0,87	87,1	86,9	85,3	7,6	-	3,4	-	4,0	0,0031	21,5
4	AGM3E 112 M 2	2920	7,4	13,1	0,88	88,1	88,0	87,2	7,2	2,3	2,8	0,9	3,5	0,0048	22,7
5,5	AGM3E 132 S 2a	2920	9,8	18,0	0,91	89,2	89,0	87,4	7,6	2,5	2,8	0,9	3,5	0,013	40
7,5	AGM3E 132 S 2b	2930	13,3	24,5	0,90	90,1	90,1	89,5	7,2	2,3	2,6	0,9	3,4	0,017	52
11	AGM3E 160 M 2a	2955	19,5	35,5	0,89	91,2	91,2	90,4	8,5	2,8	3,1	1,0	4,0	0,034	73
15	AGM3E 160 M 2b	2955	27,0	48,5	0,87	91,9	91,8	91,6	7,5	2,4	2,4	0,8	3,0	0,046	88
22	AGM3E 180 M 2	2960	38,0	71	0,90	92,7	92,6	92,2	7,0	2,3	2,4	0,8	3,0	0,075	147
30	AGM3E 200 L 2a	2980	52	96	0,89	93,3	93,3	92,8	8,5	2,7	2,8	0,9	3,5	0,15	190
37	AGM3E 200 L 2b	2980	63	119	0,90	93,7	93,7	93,1	8,3	2,7	2,8	0,9	3,1	0,17	220

CAST IRON HOUSING - 3000 min^{-1}

5,5	GM3E 132S 2a	2920	9,8	18	0,91	89,2	89,0	87,4	7,6	2,5	2,8	0,9	3,5	0,013	52
7,5	GM3E 132S 2b	2920	13,3	24,5	0,90	90,1	90,1	89,5	7,2	2,3	2,6	0,9	3,4	0,017	64
11	GM3E 160M 2a	2945	19,1	35,5	0,91	91,2	91,2	90,4	8,5	2,8	3,1	1,0	4,0	0,034	105
15	GM3E 160M 2b	2955	26	48,5	0,91	91,9	91,8	91,6	7,5	2,4	2,4	0,8	3,0	0,046	120
18,5	GM3E 160L 2	2960	31,5	59,9	0,92	92,4	92,5	92,0	8,2	2,6	3,0	1,0	3,2	0,056	145
22	GM3E 180M 2	2960	38,0	71	0,90	92,7	92,6	92,2	7,0	2,3	2,4	0,8	3,0	0,075	170
30	GM3E 200L 2a	2980	52	96	0,89	93,3	93,3	92,8	8,5	2,7	2,8	0,9	3,5	0,15	240
37	GM3E 200L 2b	2980	63	119	0,90	93,7	93,7	93,1	8,3	2,7	2,8	0,9	3,1	0,17	270
45	GM3E 225M 2	2980	77	144	0,91	94,0	94,1	93,0	8,7	2,8	2,7	0,9	3,1	0,26	380
55	GM3E 250M 2	2985	92	176	0,92	94,3	94,5	93,3	8,7	2,8	2,9	0,9	3,0	0,47	480
75	GM3E 280S 2	2985	127	240	0,90	94,7	94,6	94,0	8,0	2,6	2,9	0,9	3,2	0,62	585
90	GM3E 280M 2	2985	148	288	0,92	95,0	95,0	93,7	8,2	2,7	2,9	0,9	3,0	0,74	645
110	GM3E 315S 2	2985	186	353	0,90	95,2	95,2	94,0	8,0	2,6	2,5	0,8	3,0	1,2	742
132	GM3E 315M 2a	2985	223	423	0,90	95,4	95,4	94,1	8,0	2,6	2,4	0,8	3,5	1,4	812
160	GM3E 315M 2b	2985	265	513	0,91	95,6	95,6	94,2	8,0	2,6	2,5	0,8	3,0	1,5	912
185	GMM3E 315L 2a	2985	304	593	0,92	95,8	95,7	94,2	7,5	2,5	2,5	0,8	2,8	1,8	1110
200	GMM3E 315L 2b	2985	324	641	0,93	95,8	95,8	94,6	7,5	2,5	2,5	0,8	2,8	1,8	1110
250	GMM3E 355M 2a	2990	413	801	0,92	95,8	95,8	94,6	7,0	2,4	2,0	0,6	2,5	3,6	1170
315	GMM3E 355M 2b	2990	516	1009	0,92	95,8	95,8	94,7	7,0	2,4	2,0	0,6	2,5	4,5	1360
355	GMM3E 355M 2c	2990	575	1138	0,93	95,8	95,7	94,8	7,2	2,4	2,0	0,6	2,5	4,7	1420
400	GMM3E 355L 2a	2990	660	1282	0,92	95,8	95,8	94,9	7,0	2,4	2,0	0,6	2,5	5,3	1630

Efficiencies are calculated according to indirect method where the additional load losses are determined from exact measurements at different load points. (IEC 60034-2-1 : 2014)

PREMIUM EFFICIENCY MOTORS

IE3

3-phase, 400 V, 50 Hz
Duty type : S1 (continuous)
Degree of protection : IP 55
Insulation class : F (155°C)
Temp. Rise : Class B (80K)

4 pole, 1500 min^{-1}

Rated output	Type	Full-load data							Starting data				Breakdown torque ratio	Moment of inertia	Weight approx.
		Speed n	Current I_N	Torque M_N	Power Factor Cos φ	Efficiency η % IEC 60034-2-1:2007			Locked-rotor current ratio I_A/I_N		Locked-rotor torque ratio M_A/M_N		M_K/M_N	J	B3
kW		min^{-1}	A	Nm		At 4/4	At 3/4	At 1/2	D.O.L.	Y/Δ	D.O.L.	Y/Δ		kgm^2	kg

ALUMINIUM HOUSING - 1500 min^{-1}

0,75	AGM3E 80 4b	1440	2,0	4,97	0,66	82,5	82,5	80,8	5,5	-	2,7	-	3,0	0,0017	11,9
1,1	AGM3E 90 S 4	1440	2,60	7,35	0,73	84,1	84,1	82,8	5,1	-	2,5	-	3,0	0,0025	13,7
1,5	AGM3E 90 L 4	1440	3,30	9,95	0,77	85,3	85,3	84,0	6,5	-	3,6	-	3,7	0,0033	17,0
2,2	AGM3E 100 L 4a	1445	5,0	14,5	0,73	86,7	86,8	85,0	5,9	-	2,7	-	3,4	0,0052	21,1
3	AGM3E 100 L 4b	1445	6,6	19,8	0,75	87,7	87,8	86,1	6,4	-	3,2	-	3,8	0,0068	28
4	AGM3E 112 M 4	1460	7,9	26,2	0,82	88,6	88,5	88,0	7,2	2,4	3,0	1,0	3,6	0,012	36
5,5	AGM3E 132 S 4	1470	11,0	35,7	0,81	89,6	89,6	88,8	7,0	2,3	2,7	0,9	3,3	0,026	48
7,5	AGM3E 132 M 4	1470	15,4	48,7	0,78	90,4	90,5	89,6	7,5	2,5	3,0	1,0	3,6	0,032	56
11	AGM3E 160 M 4	1470	21,0	71,5	0,83	91,4	91,3	91,0	6,9	2,2	2,4	0,8	3,1	0,072	90
18,5	AGM3E 180 M 4	1475	34,5	120	0,84	92,6	92,6	91,6	7,8	2,6	3,2	1,0	3,8	0,15	160
22	AGM3E 180 L 4	1475	42,5	142	0,80	93,0	92,8	92,0	8,3	2,7	3,5	1,2	4,0	0,17	170
30	AGM3E 200 L 4	1475	55	194	0,84	93,6	93,5	93,3	7,9	2,6	2,8	0,9	3,7	0,25	190

CAST IRON HOUSING - 1500 min^{-1}

5,5	GM3E 132 S 4	1470	11,0	35,7	0,81	89,6	89,6	88,8	7,0	2,3	2,7	0,9	3,3	0,026	60
7,5	GM3E 132 M 4	1470	15,4	48,7	0,78	90,4	90,5	89,6	7,5	2,5	3,0	1,0	3,6	0,032	68
11	GM3E 160 M 4	1470	21,0	71,5	0,83	91,4	91,3	91,0	6,9	2,2	2,4	0,8	3,1	0,072	120
15	GM3E 160 L 4	1470	29,0	97,4	0,81	92,1	92,0	91,8	6,9	2,2	2,5	0,8	3,2	0,092	144
18,5	GM3E 180 M 4	1475	34,5	120	0,84	92,6	92,6	91,6	7,8	2,6	3,2	1,0	3,8	0,15	180
22	GM3E 180 L 4	1475	42,5	142	0,80	93,0	92,8	92,0	8,3	2,7	3,5	1,2	4,0	0,17	190
30	GM3E 200 L 4	1475	55	194	0,84	93,6	93,5	93,3	7,9	2,6	2,8	0,9	3,7	0,25	240
37	GM3E 225 S 4	1475	67	240	0,85	93,9	93,9	93,5	7,5	2,5	3,1	1,0	3,3	0,36	330
45	GM3E 225 M 4	1475	80	291	0,86	94,2	94,2	93,4	7,4	2,5	3,0	1,0	3,1	0,44	360
55	GM3E 250 M 4	1480	96	355	0,87	94,6	94,7	94,0	7,7	2,6	3,2	1,0	3,0	0,78	445
75	GM3E 280 S 4	1485	133	482	0,86	95,0	94,9	94,4	7,6	2,5	2,9	0,9	3,0	1,11	605
90	GM3E 280 M 4	1485	158	579	0,86	95,2	95,2	94,8	7,4	2,4	2,9	0,9	3,0	1,32	665
110	GM3E 315 S 4	1487	194	707	0,86	95,4	95,2	95,0	7,4	2,5	2,4	0,8	3,0	2,5	861
132	GM3E 315 M 4a	1487	230	848	0,87	95,6	95,4	95,3	7,4	2,5	2,4	0,8	3,0	2,8	882
160	GM3E 315 M 4b	1488	275	1027	0,88	95,8	95,6	95,6	6,9	2,3	2,2	0,7	2,9	3,0	930
185	GMM3E 315 L 4a	1488	321	1187	0,87	96,0	96,0	95,8	6,9	2,3	2,2	0,7	2,9	3,1	1015
200	GMM3E 315 L 4b	1488	350	1284	0,86	96,0	95,8	95,8	7,5	2,5	2,5	0,8	3,1	3,3	1100
250	GMM3E 355 M 4a	1490	430	1602	0,87	96,1	96,0	96,0	7,2	2,4	2,2	0,7	3,0	6,0	1400
315	GMM3E 355 M 4b	1490	540	2019	0,88	96,1	96,0	95,9	7,2	2,4	2,2	0,7	3,0	6,5	1438
355	GMM3E 355 M 4c	1490	610	2275	0,87	96,2	96,0	96,1	7,2	2,4	2,2	0,7	3,0	7,2	1490
400	GMM3E 355 L 4a	1490	690	2564	0,87	96,2	96,0	96,1	7,2	2,4	2,2	0,7	3,0	7,9	1720

Efficiencies are calculated according to indirect method where the additional load losses are determined from exact measurements at different load points. (IEC 60034-2-1 : 2014)

PREMIUM EFFICIENCY MOTORS

IE3

3-phase, 400 V, 50 Hz
Duty type : S1 (continuous)
Degree of protection : IP 55
Insulation class : F (155°C)
Temp. Rise : Class B (80K)

6 pole, 1000 min^{-1}

Rated output	Type	Full-load data							Starting data				Breakdown torque ratio	Moment of inertia	Weight approx.
		Speed n	Current I_N	Torque M_N	Power Factor Cos φ	Efficiency η % IEC 60034-2-1:2007			Locked-rotor current ratio I_A/I_N		Locked-rotor torque ratio M_A/M_N		M_K/M_N	J	B3
kW		min^{-1}	A	Nm		At 4/4	At 3/4	At 1/2	D.O.L.	Y/Δ	D.O.L.	Y/Δ		kgm^2	kg

ALUMINIUM HOUSING - 1000 min^{-1}

0,75	AGM3E 90 S 6	950	2	7,62	0,69	78,9	78,9	76,9	4,0	-	2,0	-	2,3	0,0038	13,3
1,1	AGM3E 90 L 6	940	2,9	11,18	0,78	81,0	81,0	78,3	4,0	-	2,0	-	2,4	0,0051	15,2
1,5	AGM3E 100 L 6	955	3,6	15	0,73	82,5	82,3	80,3	5,1	-	2,4	-	3,0	0,011	22,8
2,2	AGM3E 112 M 6	960	5,3	21,9	0,71	84,3	84,1	82,1	5,8	-	2,6	-	3,2	0,016	30
3	AGM3E 132 S 6	965	6,9	29,7	0,73	85,6	85,6	85,2	6,0	2,0	2,2	0,7	2,7	0,037	49
4	AGM3E 132 M 6a	965	9,0	39,6	0,74	86,8	86,7	86,4	6,0	2,0	2,2	0,7	2,7	0,051	55
5,5	AGM3E 132 M 6b	965	12,1	54,4	0,75	88,0	87,8	87,5	6,0	2,0	2,2	0,7	2,7	0,069	68
7,5	AGM3E 160 M 6	970	15	73,8	0,81	89,1	89,0	88,1	6,3	2,1	2,2	0,7	2,8	0,11	95
15	AGM3E 180 L 6	975	29	147	0,82	91,2	91,2	90,8	6,9	2,3	2,6	0,9	3,2	0,24	185
18,5	AGM3E 200 L 6a	975	36,5	181	0,81	91,7	91,6	91,3	7,0	2,3	2,6	0,9	3,2	0,26	172
22	AGM3E 200 L 6b	975	43	215	0,80	92,2	92,0	91,7	7,0	2,3	2,6	0,9	3,2	0,32	195

CAST IRON HOUSING - 1000 min^{-1}

3	GM3E 132 S 6	965	6,9	29,7	0,73	85,6	85,6	85,2	6,0	2,0	2,2	0,7	2,7	0,037	61
4	GM3E 132 M 6a	965	9,0	39,6	0,74	86,8	86,7	86,4	6,0	2,0	2,2	0,7	2,7	0,051	68
5,5	GM3E 132 M 6b	965	12,1	54,4	0,75	88,0	87,8	87,5	6,0	2,0	2,2	0,7	2,7	0,069	81
7,5	GM3E 160 M 6	970	15	73,8	0,81	89,1	89,0	88,1	6,3	2,1	2,2	0,7	2,8	0,11	126
11	GM3E 160 L 6	970	21,5	108,3	0,82	90,3	90,3	89,0	7,0	2,3	2,5	0,8	3,2	0,14	146
15	GM3E 180 L 6	975	29	147	0,82	91,2	91,2	90,8	6,9	2,3	2,6	0,9	3,2	0,24	209
18,5	GM3E 200 L 6a	975	36,5	181	0,80	91,7	91,6	91,3	7,0	2,3	2,6	0,9	3,2	0,26	222
22	GM3E 200 L 6b	975	43	215	0,80	92,2	92,0	91,7	7,0	2,3	2,6	0,9	3,2	0,32	245
30	GM3E 225 M 6	985	58	291	0,80	92,9	92,9	92,1	7,0	2,3	3,3	1,1	2,7	0,69	325
37	GM3E 250 M 6	987	70	358	0,82	93,3	93,2	92,9	7,0	2,3	2,8	0,9	2,6	0,99	440
45	GM3E 280 S 6	990	88	434	0,79	93,7	93,7	92,9	6,9	2,3	3,0	1,0	2,8	1,5	553
55	GM3E 280 M 6	990	107	531	0,79	94,1	94,1	92,8	7,3	2,4	3,3	1,1	3,2	1,7	578
75	GM3E 315 S 6	992	140	722	0,82	94,6	94,6	94,4	7,2	2,4	2,7	0,9	3,0	2,9	805
90	GM3E 315 M 6a	992	166	866	0,83	94,9	94,9	94,5	7,2	2,4	2,7	0,9	3,0	3,5	860
110	GM3E 315 M 6b	992	198	1058	0,84	95,1	95,1	94,9	7,2	2,4	2,7	0,9	3,0	4,2	980
132	GMM3E 315 L 6	992	235	1270	0,85	95,4	95,4	95,2	7,2	2,4	2,7	0,9	3,0	4,3	1150
160	GMM3E 355 M 6a	993	290	1538	0,83	95,6	95,6	95,0	7,0	2,3	2,4	0,8	3,2	6,8	1185
200	GMM3E 355 M 6b	993	345	1923	0,87	95,8	95,8	95,3	7,0	2,3	2,4	0,8	3,2	8,3	1390
250	GMM3E 355 M 6c	993	437	2404	0,86	95,8	95,8	95,4	7,0	2,3	2,4	0,8	3,2	10,4	1716
315	GMM3E 355 L 6a	993	555	3029	0,86	95,8	95,7	95,5	7,0	2,3	2,4	0,8	3,2	11,7	1890
355	GMM3E 355 L 6b	993	610	3414	0,88	95,8	95,7	95,5	7,0	2,3	2,4	0,8	3,2	13,2	2020
355	GMM3E 400 L 6a	995	610	3407	0,88	95,9	95,9	95,7	6,8	2,3	2,2	0,7	2,9	23,6	2450
400	GMM3E 400 L 6b	995	690	3839	0,87	95,9	95,9	95,7	6,8	2,3	2,2	0,7	2,9	26,6	2705

Efficiencies are calculated according to indirect method where the additional load losses are determined from exact measurements at different load points.
(IEC 60034-2-1 : 2014)

MULTI SPEED MOTORS

The multi speed induction motors offers two or more outputs and speeds from a single frame. In general, two speed motors are made up of either one or two windings in one stator.

They can be divided into two different winding types ;

Dahlander, pole changing or tap and wound : Comprises a single winding with two stator winding polarities which gives the ability to change motor speeds at ratios of 2:1 by varying the connections. The 4/2 and 8/4 pole motors stipulated at “Ratings and performance” pages are dahlander wound motors.

Two separate windings or dual wound : The motor has two distinctly different windings of different polarities within the same stator with each having its own power rating. This design is mostly used for those applications where the polarity ratios of pole change are inappropriate. The 6/4 and 12/4 pole motors stipulated at “Ratings and performance” pages are dual wound motors.

It is possible to have a combination of both the above systems and obtain a three or four speed motor. Please consult GAMAK for such motors.

There are two categories, each with its own specific drive characteristics appropriate for particular duties ;

- Constant torque: Where the torque requirement is independent of speed
- Variable torque: Where the torque requirement increases with the square of the speed

Constant Torque

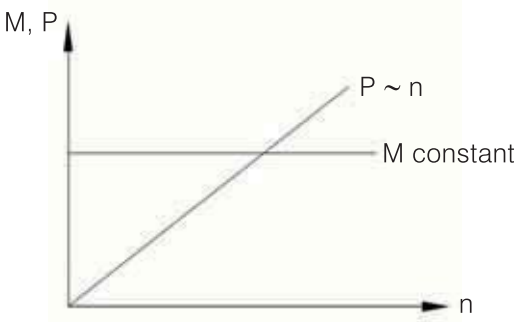

Constant torque applications require high starting torque during startup and constant torque throughout the speed range. Output increases and decreases in proportion to speed. Typical constant torque applications are compressors, machine tools, conveyors, hoists and positive displacement pumps.

Variable Torque

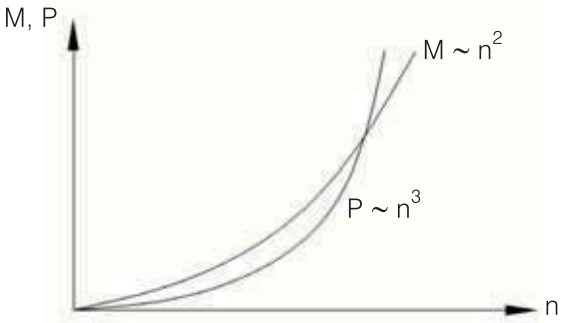

Variable torque applications do not require high starting torque during startup. Torque increases or decreases as the square of an increase or decrease in speed. Output power requirement at half speed is about one quarter of that at full speed. On the other hand it is about three times when speed increases 1,5 times the full speed. Typical variable torque applications are fans and pumps.

The connection of constant torque is Δ/YY and variable torque is Y/YY for dahlander wound motors. For dual wound motors, connection is Y/Y for both constant and variable torque. Terminal connections are as follows;

3-Phase, two speed

Two speed, Dahlander wound

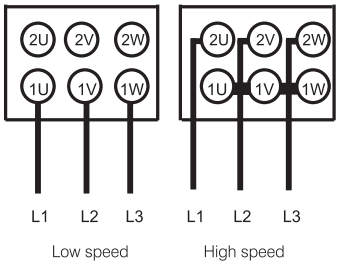

Two speed, dual wound

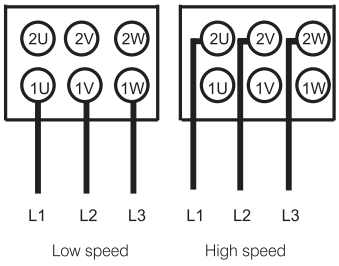

RATINGS AND PERFORMANCE

1500/3000 min^{-1}, Two Speed Motors
Suitable for constant torque applications
Single winding - Dahlander Connection Δ/YY

3-phase, 400 V, 50 Hz
Duty type : S1 (continuous)
Degree of protection : IP 55
Insulation class : F (155°C)
Temp. Rise : Class B (80K)

Rated output	Type	Full-load data					Starting data		Breakdown torque ratio	Moment of inertia	Weight approx.
		Speed n	Current I_N	Torque M_N	Power Factor Cos φ	Efficiency η %	Locked-rotor current ratio I_A/I_N	Locked-rotor torque ratio M_A/M_N	M_K/M_N	J	B3
kW		min^{-1}	A	Nm		IEC 60034-2-1:2007 At 4/4	D.O.L.	D.O.L.		kgm^2	kg
4/2 pole, 1500/3000 min^{-1}											
ALUMINIUM HOUSING											
0,06/0,08	AGM 56 4/2a	1360/2750	0,40/0,46	0,42/0,28	0,49/0,50	42,7/48,5	2,6/2,9	1,9/2,1	2,0/2,2	0,00011	2,7
0,08/0,1	AGM 56 4/2b	1360/2750	0,43/0,48	0,56/0,35	0,58/0,56	44,6/52,4	2,8/3,1	2,0/2,2	2,1/2,3	0,00012	2,8
0,11/0,15	AGM 63 4/2a	1390/2800	0,50/0,50	0,76/0,51	0,68/0,73	45,6/57,3	2,8/3,5	1,8/1,9	1,9/2,3	0,00017	3,2
0,15/0,22	AGM 63 4/2b	1390/2800	0,67/0,64	1,03/0,75	0,66/0,81	47,6/59,3	2,7/3,7	1,9/1,8	2,3/2,2	0,00021	3,7
0,22/0,3	AGM 71 4/2a	1375/2750	0,70/0,85	1,5/1	0,73/0,84	60,3/59,4	3,0/3,3	1,5/1,4	1,9/1,8	0,00040	4,9
0,3/0,44	AGM 71 4/2b	1390/2800	0,95/1,2	2,1/1,5	0,72/0,81	61,3/63,3	3,0/3,1	1,5/1,3	2,0/1,8	0,00054	5,9
0,5/0,6	AGM 80 4/2a	1370/2780	1,4/1,6	3,5/2,1	0,79/0,86	63,3/61,4	3,0/3,5	1,4/1,5	1,7/2,0	0,00083	7,6
0,7/0,85	AGM 80 4/2b	1370/2800	2/2,3	4,9/2,9	0,75/0,76	65,3/68,3	3,3/4,0	1,7/2,0	2,0/2,3	0,0011	8,7
1/1,3	AGM 90 S 4/2	1370/2750	2,5/3,3	7/4,5	0,81/0,85	69,3/65,4	3,8/3,7	1,7/1,7	2,0/1,8	0,0019	11,5
1,3/1,8	AGM 90 L 4/2	1390/2800	3/4,3	8,9/6,1	0,85/0,86	72,2/68,4	4,4/4,2	2,0/1,9	2,2/2,0	0,0024	13,6
1,8/2,2	AGM 100 L 4/2a	1420/2840	4,1/5,5	12,1/7,4	0,82/0,80	75,2/70,4	4,9/4,5	2,0/2,1	2,3/2,4	0,0038	17,3
2,4/3	AGM 100 L 4/2b	1390/2820	5,2/6,8	16,5/10,2	0,83/0,84	78,2/74,3	4,7/4,9	2,0/2,1	2,2/2,3	0,0050	20,8
3,7/4,5	AGM 112 M 4/2	1430/2880	7,6/10	25/15	0,86/0,82	80,2/77,3	5,6/5,3	1,9/1,9	2,3/2,4	0,0092	28,7
4,5/5,5	AGM 132 S 4/2	1430/2860	9,5/14	30/18	0,84/0,77	79,3/74,4	5,4/5,1	2,0/1,9	2,2/2,2	0,019	39
6,3/7,5	AGM 132 M 4/2	1440/2880	12,6/17	42/25	0,88/0,81	80,3/77,4	5,6/6,0	2,3/2,4	2,5/2,6	0,026	47
7,5/10	C.AGM 132 M 4/2	1440/2890	15/21	50/33	0,85/0,86	81,3/78,4	6,4/6,4	2,5/2,1	3,1/3,1	0,032	56
9/11	AGM 160 M 4/2	1450/2900	18/23	59/36	0,86/0,88	84,3/78,4	6,2/6,3	2,3/2,4	2,4/2,6	0,054	74
12,5/15	AGM 160 L 4/2	1465/2930	24/29	81/49	0,85/0,88	86,3/83,4	5,6/6,9	2,2/2,4	2,2/2,5	0,072	104
17/20	AGM 180 L 4/2	1455/2930	33/39	112/65	0,85/0,90	85,4/80,5	6,2/7,2	2,5/2,7	2,6/3,0	0,13	143
21/25	AGM 200 L 4/2	1460/2920	40/46	137/82	0,89/0,90	83,5/85,5	6,6/6,8	2,4/2,6	2,4/2,7	0,19	185
25/30	C.AGM 200 L 4/2	1460/2915	45/56	164/98	0,91/0,90	86,4/84,5	6,4/6,6	2,0/2,2	2,3/2,6	0,23	205
CAST IRON HOUSING											
4,5/5,5	GM 132 S 4/2	1430/2860	9,5/14	30/18	0,84/0,77	79,3/74,4	5,4/5,1	2,0/1,9	2,2/2,2	0,019	51
6,3/7,5	GM 132 M 4/2	1440/2880	12,6/17	42/25	0,88/0,81	80,3/77,4	5,6/6,0	2,3/2,4	2,5/2,6	0,026	60
9/11	GM 160 M 4/2	1450/2900	18/23	59/36	0,86/0,88	84,3/78,4	6,2/6,3	2,3/2,4	2,4/2,6	0,054	105
12,5/15	GM 160 L 4/2	1465/2930	24/29	81/49	0,85/0,88	86,3/83,4	5,6/6,9	2,2/2,4	2,2/2,5	0,072	140
17/20	GM 180 L 4/2	1455/2930	33/39	112/65	0,85/0,90	85,4/80,5	6,2/7,2	2,5/2,7	2,6/3,0	0,13	170
21/25	GM 200 L 4/2	1460/2920	40/46	137/82	0,89/0,90	83,5/85,5	6,6/6,8	2,4/2,6	2,4/2,7	0,19	235
25/30	C. GM 200 L 4/2	1460/2915	45/56	164/98	0,91/0,90	86,4/84,5	6,4/6,6	2,0/2,2	2,3/2,6	0,23	255
31/37	GM 225 M 4/2	1460/2915	56/70	203/121	0,88/0,89	89,4/84,5	5,6/5,6	1,9/1,9	2,0/2,3	0,35	320
39/45	GM 250 M 4/2	1465/2935	72/78	254/146	0,87/0,94	88,5/87,5	6,1/6,9	2,3/2,6	2,3/2,8	0,54	395
46/55	C. GM 250 M 4/2	1465/2935	81/96	300/179	0,90/0,93	89,5/87,6	6,2/7,0	2,3/2,6	2,3/2,8	0,72	450
56/67	GM 280 M 4/2	1480/2970	100/121	361/215	0,88/0,91	90,5/86,6	8,0/8,6	2,8/2,6	2,8/3,3	1,1	615
72/82	C. GM 280 M 4/2	1480/2970	129/148	465/264	0,88/0,91	90,6/86,7	8,0/8,6	2,4/2,0	2,4/2,8	1,3	665
77/90	GM 315 S 4/2	1485/2980	148/153	495/288	0,81/0,93	91,6/89,6	7,0/7,5	2,2/2,1	2,5/2,6	0,96	720
94/110	GM 315 M 4/2a	1485/2980	181/186	605/353	0,80/0,93	92,6/90,7	8,6/8,8	2,4/2,3	2,7/2,8	1,2	805
120/140	GM 315 M 4/2b	1485/2980	225/231	772/449	0,82/0,94	92,6/91,7	7,6/8,8	2,1/2,0	2,5/2,6	1,4	870
132/155	GMM 315 L 4/2a	1485/2980	247/255	849/497	0,82/0,94	92,7/91,7	8,6/8,8	2,2/2,1	2,5/2,6	1,42	920
143/168	GMM 315 L 4/2b	1485/2980	282/276	920/538	0,78/0,94	92,7/91,7	8,6/8,8	2,4/2,3	2,8/2,9	1,5	950

⚠ Two speed motors must first be started at low speed and then switched over to higher speed.

⚠ Above Dahlander connected motors are suitable for DOL starting only. Y/Δ starting is possible on request.

Efficiencies are calculated according to indirect method where the additional load losses are determined from exact measurements at different load points. (IEC 60034-2-1 : 2014)

750/1500 min^{-1}, Two Speed Motors
Suitable for constant torque applications
Single winding - Dahlander Connection Δ/YY

3-phase, 400 V, 50 Hz
Duty type : S1 (continuous)
Degree of protection : IP 55
Insulation class : F (155°C)
Temp. Rise : Class B (80K)

Rated output	Type	Full-load data					Starting data		Breakdown torque ratio	Moment of inertia	Weight approx.
		Speed n	Current I_N	Torque M_N	Power Factor Cos φ	Efficiency η %	Locked-rotor current ratio I_A/I_N	Locked-rotor torque ratio M_A/M_N	M_K/M_N	J	B3
kW		min^{-1}	A	Nm		IEC 60034-2-1:2007 At 4/4	D.O.L.	D.O.L.		kgm^2	kg
8/4 pole, 750/1500 min^{-1}											
ALUMINIUM HOUSING											
0,15/0,25	AGM 71 8/4	680/1380	0,65/0,7	2,1/1,7	0,71/0,81	45,7/62,3	2,3/3,1	1,5/1,4	1,8/1,7	0,00086	6,3
0,26/0,37	AGM 80 8/4a	690/1400	1,1/0,9	3,6/2,5	0,63/0,84	52,5/69,1	2,6/4,2	1,6/1,7	1,9/2,0	0,0017	8,1
0,35/0,55	AGM 80 8/4b	670/1370	1,4/1,5	5/3,8	0,62/0,77	56,5/67,2	2,6/3,7	1,8/1,7	2,0/2,0	0,0022	9,4
0,4/0,7	AGM 90 S 8/4	690/1380	1,6/1,7	5,5/4,8	0,59/0,83	59,4/69,2	2,9/3,7	1,6/1,4	2,0/1,6	0,0029	11,3
0,6/0,9	AGM 90 L 8/4	680/1365	2,1/2,2	8,4/6,3	0,68/0,84	59,4/68,3	2,8/3,8	1,4/1,5	1,7/1,7	0,0038	13,5
0,75/1,1	AGM 100 L 8/4a	690/1400	2,4/2,6	10,4/7,5	0,69/0,85	63,4/70,3	3,2/4,4	1,6/1,8	1,9/2,1	0,0062	17,7
1/1,6	AGM 100 L 8/4b	690/1395	3,4/3,5	13,8/11	0,63/0,90	65,4/71,3	3,1/4,3	1,8/1,7	2,1/2,0	0,0084	19,6
1,5/2,5	AGM 112 M 8/4	705/1400	4,4/5,1	20,3/17,1	0,67/0,88	71,3/78,2	3,8/4,2	1,9/1,7	2,4/2,2	0,013	26,5
2,2/3,4	AGM 132 S 8/4	700/1400	6,9/7,4	30/23	0,65/0,87	69,4/74,3	3,6/4,8	1,8/1,8	2,1/1,9	0,024	35
3,5/5,5	AGM 132 M 8/4	700/1400	10/11,2	48/38	0,68/0,90	72,4/78,7	3,8/5,3	1,8/1,7	2,0/2,0	0,033	43
4,5/6	AGM 160 M 8/4a	715/1425	11/12,7	60/40	0,74/0,87	78,3/76,4	4,3/5,1	1,7/1,7	2,0/2,2	0,060	63
5,5/7,5	AGM 160 M 8/4b	715/1435	13/15,7	73/50	0,75/0,86	79,3/78,4	5,2/6,1	2,2/2,2	2,4/2,4	0,083	73
7,5/11	AGM 160 L 8/4	720/1440	17/22	99/73	0,77/0,88	81,3/80,4	5,0/5,8	2,1/2,4	2,4/2,4	0,12	102
11/15	AGM 180 L 8/4	720/1450	24/30	146/99	0,78/0,86	83,4/82,4	5,8/7,0	2,3/2,6	2,7/2,9	0,20	138
16/24	C.AGM 200 L 8/4	725/1460	38/44	211/157	0,71/0,89	84,4/86,4	4,8/6,2	2,3/1,9	2,4/2,3	0,23	205
CAST IRON HOUSING											
2,2/3,4	GM 132 S 8/4	700/1400	6,9/7,4	30/23,2	0,65/0,87	69,4/74,3	3,6/4,8	1,8/1,8	2,1/1,9	0,024	47
3,5/5,5	GM 132 M 8/4	700/1400	10/11,2	48/38	0,68/0,90	72,4/77,4	3,8/5,3	1,8/1,7	2,0/2,0	0,033	56
4,5/6	GM 160 M 8/4a	715/1425	11/12,7	60/40	0,74/0,87	78,3/76,4	4,3/5,1	1,7/1,7	2,0/2,2	0,060	95
5,5/7,5	GM 160 M 8/4b	715/1435	13/15,7	73/50	0,75/0,86	79,3/78,4	5,2/6,1	2,2/2,2	2,4/2,4	0,083	105
7,5/11	GM 160 L 8/4	720/1440	17/22	99/73	0,77/0,88	81,3/80,4	5,0/5,8	2,1/2,4	2,4/2,4	0,12	134
11/15	GM 180 L 8/4	720/1450	24/30	146/99	0,78/0,86	83,4/82,4	5,8/7,0	2,3/2,6	2,7/2,9	0,20	165
16/24	C. GM 200 L 8/4	725/1460	38/44	211/157	0,71/0,89	84,4/86,4	4,8/6,2	2,3/1,9	2,4/2,3	0,23	255
18,5/32	GM 225 M 8/4	730/1460	49/58	242/209	0,63/0,89	84,4/87,5	3,9/5,4	2,2/2,0	2,1/2,2	0,35	320
23/40	C. GM 225 M 8/4	730/1470	59/72	301/260	0,65/0,90	85,4/87,5	4,4/5,7	2,4/2,2	2,2/2,3	0,44	360
30/48	C. GM 250 M 8/4	730/1470	77/84	392/312	0,65/0,91	84,5/89,5	4,3/6,4	2,2/2,1	1,9/2,4	0,72	450
37/55	GM 280 M 8/4	740/1480	95/97	478/355	0,65/0,90	85,5/89,5	4,5/6,4	1,6/1,6	1,4/1,8	1,1	615
45/66	C. GM 280 M 8/4	735/1480	110/122	585/426	0,66/0,85	87,5/90,6	4,7/6,6	1,8/2,1	1,6/2,1	1,3	665
55/75	GM 315 S 8/4	740/1485	113/133	710/482	0,76/0,89	90,5/89,6	5,5/6,7	2,0/1,9	1,9/2,0	2	695
65/90	GM 315 M 8/4a	740/1485	129/176	839/579	0,78/0,80	91,5/90,6	6,3/6,1	2,0/1,9	1,9/2,0	2,5	745
80/110	GM 315 M 8/4b	740/1485	163/195	1032/707	0,76/0,89	91,6/90,7	7,0/8,0	2,4/2,2	2,3/2,3	3	820
90/125	GMM 315 L 8/4	740/1485	179/220	1154/804	0,80/0,91	89,6/88,7	5,6/6,3	2,0/1,8	1,7/1,7	4	860

⚠ Two speed motors must first be started at low speed and then switched over to higher speed.

⚠ Above Dahlander connected motors are suitable for DOL starting only. Y/Δ starting is possible on request.

Efficiencies are calculated according to indirect method where the additional load losses are determined from exact measurements at different load points.
(IEC 60034-2-1 : 2014)

RATINGS AND PERFORMANCE

1000/1500 min^{-1}, Two Speed Motors
Suitable for constant torque applications
Two separate windings Y/Y

3-phase, 400 V, 50 Hz
Duty type : S1 (continuous)
Degree of protection : IP 55
Insulation class : F (155ºC)
Temp. Rise : Class B (80K)

Rated output	Type	Full-load data					Starting data		Breakdown torque ratio	Moment of inertia	Weight approx.
		Speed n	Current I_N	Torque M_N	Power Factor Cos φ	Efficiency η %	Locked-rotor current ratio I_A/I_N	Locked-rotor torque ratio M_A/M_N	M_K/M_N	J	B3
kW		min^{-1}	A	Nm		IEC 60034-2-1:2007 At 4/4	D.O.L.	D.O.L.		kgm^2	kg

6/4 pole, 1000/1500 min^{-1}

ALUMINIUM HOUSING

0,12/0,16	AGM 71 6/4a	920/1370	0,7/0,72	1,25/1,12	0,59/0,67	40,8/46,6	3,1/2,6	1,3/1,3	1,7/1,6	0,00064	5,4
0,18/0,22	AGM 71 6/4b	920/1370	0,8/0,9	1,87/1,53	0,71/0,65	44,7/52,5	3,2/2,8	1,4/1,4	1,7/1,6	0,00086	6,3
0,18/0,33	AGM 80 6/4a	930/1410	0,9/1,1	2,57/2,24	0,85/0,73	45,7/57,4	3,1/3,2	1,5/1,5	2,0/2,1	0,0017	8,1
0,3/0,4	AGM 80 6/4b	930/1425	1/1,2	3,08/2,68	0,85/0,77	47,7/59,4	3,4/4,3	1,8/2,0	2,2/2,5	0,0022	9,4
0,45/0,6	AGM 90 S 6/4	940/1430	1,5/1,8	4,6/4	0,70/0,79	60,4/59,4	3,3/3,8	1,4/1,6	1,8/2,1	0,0029	11,3
0,6/0,9	AGM 90 L 6/4	950/1420	2/2,5	6/6,1	0,69/0,80	61,4/63,4	3,9/3,3	1,7/1,5	2,4/1,9	0,0038	13,5
1,2/1,7	AGM 100 L 6/4	950/1425	3,4/4,2	12,1/11,4	0,74/0,85	67,3/67,4	3,7/4,1	1,8/1,7	2,0/1,9	0,0084	19,3
1,5/2,4	AGM 112 M 6/4	950/1435	4/5,6	15,1/16	0,74/0,79	71,3/76,2	4,6/4,8	1,9/1,7	2,4/2,2	0,013	26,5
2,2/3,3	AGM 132 S 6/4	965/1445	5,6/7,6	21,8/21,8	0,77/0,84	72,3/73,4	4,8/5,0	1,9/1,7	2,6/2,3	0,022	36
3,2/5	AGM 132 M 6/4	960/1450	7,6/11	31,8/32,9	0,77/0,80	77,3/80,3	5,6/6,1	2,3/1,9	2,5/2,2	0,043	49,5
5/7,5	AGM 160 M 6/4	970/1455	10,5//15	49,2/49,2	0,86/0,89	78,3/79,4	5,5/5,8	1,8/1,7	2,5/2,5	0,079	81
6,5/10	AGM 160 L 6/4	965/1450	13,3/19	64,3/65,9	0,87/0,90	79,3/82,4	5,4/6,4	1,8/1,9	2,4/2,5	0,11	95
9,5/15	AGM 180 L 6/4	970/1460	19/28	93,5/98,1	0,86/0,91	82,3/83,4	6,5/6,9	1,7/1,8	2,7/2,9	0,16	145
15/23	AGM 200 L 6/4	970/1470	31/43	148/149	0,82/0,88	83,4/86,4	7,1/7,5	2,1/1,9	3,0/3,0	0,26	185

CAST IRON HOUSING

2,2/3,3	GM 132 S 6/4	965/1445	5,6/7,6	22/22	0,77/0,84	72,3/73,4	4,8/5,0	1,9/1,7	2,6/2,3	0,022	48
3,2/5	GM 132 M 6/4	960/1450	7,6/11	32/33	0,77/0,80	77,3/80,3	5,6/6,1	2,3/1,9	2,5/2,2	0,043	62
5/7,5	GM 160 M 6/4	970/1455	10,5/15	49/49	0,86/0,89	78,3/79,4	5,5/5,8	1,8/1,7	2,5/2,5	0,079	115
6,5/10	GM 160 L 6/4	965/1450	13,3/19	64/66	0,87/0,90	79,3/82,4	5,4/6,4	1,8/1,9	2,4/2,5	0,11	125
9,5/15	GM 180 L 6/4	970/1460	19/28	94/98	0,86/0,91	82,3/83,4	6,5/6,9	1,7/1,8	2,7/2,9	0,16	175
15/23	GM 200 L 6/4	970/1470	31/43	148/149	0,82/0,88	83,4/86,4	7,1/7,5	2,1/1,9	3,0/3,0	0,26	235
22/32	GM 225 M 6/4	980/1470	43/57	214/208	0,84/0,91	86,4/87,5	5,8/7,0	2,4/2,4	2,1/2,4	0,57	330
26/39	GM 250 M 6/4	980/1475	53/72	253/253	0,80/0,88	86,5/87,5	6,7/6,0	2,6/2,2	2,2/2,2	0,77	395
39/57	GM 280 S 6/4	985/1475	78/108	378/369	0,81/0,86	87,5/87,6	6,3/5,5	2,5/2,1	2,3/2,2	1,2	550
46/66	GM 280 M 6/4	990/1485	91/131	444/424	0,81/0,81	88,5/88,6	6,8/6,2	2,5/2,1	2,3/2,2	1,5	610
52/75	GM 315 S 6/4	990/1485	95/135	502/482	0,88/0,89	88,5/88,6	6,2/6,0	1,6/1,6	2,3/2,3	2	695
58/85	GM 315 M 6/4a	990/1480	110/158	559/548	0,84/0,85	89,6/89,6	7,9/5,5	1,8/1,6	2,0/1,9	2,5	745
75/110	GM 315 M 6/4b	990/1485	141/190	723/707	0,83/0,91	90,6/90,7	8,2/7,2	1,8/1,6	1,9/1,8	3	820
86/125	GMM 315 L 6/4	990/1485	160/210	830/804	0,83/0,92	91,6/91,7	8,0/6,0	1,8/1,6	1,9/1,8	4	860

⚠ Two speed motors must first be started at low speed and then switched over to higher speed.

⚠ Above Dahlander connected motors are suitable for DOL starting only. Y/Δ starting is possible on request.

Efficiencies are calculated according to indirect method where the additional load losses are determined from exact measurements at different load points.
(IEC 60034-2-1 : 2014)

500/1500 min^{-1}, Two Speed Motors
Suitable for constant torque applications
Two separate windings Y/Y

3-phase, 400 V, 50 Hz
Duty type : S1 (continuous)
Degree of protection : IP 55
Insulation class : F (155ºC)
Temp. Rise : Class B (80K)

Rated output	Type	Full-load data					Starting data		Breakdown torque ratio	Moment of inertia	Weight approx.
		Speed n	Current I_N	Torque M_N	Power Factor Cos φ	Efficiency η %	Locked-rotor current ratio I_A/I_N	Locked-rotor torque ratio M_A/M_N	M_K/M_N	J	B3
kW		min^{-1}	A	Nm		IEC 60034-2-1:2007 At 4/4	D.O.L.	D.O.L.		kgm^2	kg

12/4 pole, 500/1500 min^{-1}

ALUMINIUM HOUSING

0,037/0,11	AGM 71 12/4a	440/1410	0,40/0,40	0,8/0,7	0,49/0,74	26,2/52,4	1,6/1,3	1,4/1,2	1,7/1,7	0,00064	5
0,05/0,15	AGM 71 12/4b	440/1410	0,43/0,45	1,1/1	0,58/0,84	28,1/55,4	1,6/3,2	1,4/1,2	1,7/1,7	0,00086	5,7
0,08/0,25	AGM 80 12/4a	440/1410	0,65/0,9	1,7/1,7	0,59/0,69	29,1/56,4	1,6/3,6	1,3/1,9	1,5/2,5	0,0017	8,1
0,12/0,37	AGM 80 12/4b	430/1430	1/1,7	2,7/2,5	0,54/0,54	31,1/56,5	1,6/3,6	1,3/1,9	1,5/2,5	0,0022	9,4
0,15/0,6	AGM 90 S 12/4	450/1410	1,1/1,9	3,2/4,1	0,58/0,76	33,0/58,5	1,8/3,5	1,3/1,6	1,5/2,2	0,0029	11,3
0,2/0,8	AGM 90 L 12/4	430/1420	1,8/2,8	4,4/5,4	0,37/0,61	41,4/66,3	2,0/4,2	1,6/1,6	2,1/2,2	0,0038	13,3
0,3/0,9	AGM 100 L 12/4a	460/1435	1,8/2,6	6,2/6	0,57/0,75	40,9/65,4	2,1/4,1	1,3/1,5	1,7/2,2	0,0062	17,4
0,37/1,6	AGM 100 L 12/4b	450/1430	2,3/4,4	7,9/11	0,49/0,75	45,8/68,4	2,1/4,1	1,3/1,5	1,7/2,1	0,0084	19,1
0,6/1,9	AGM 112 M 12/4	450/1450	3/5	13/13	0,52/0,75	53,6/71,3	2,3/5,6	1,5/1,8	1,9/2,8	0,013	26,5
0,7/2,2	AGM 132 S 12/4	460/1450	4,2/6,5	15/14	0,44/0,65	53,6/73,3	2,2/5,5	1,5/2,0	1,8/3,1	0,019	37
1,2/3,7	AGM 132 M 12/4a	460/1450	6,5/8,5	25/24	0,48/0,78	54,7/79,2	2,2/5,7	1,5/2,0	1,8/3,2	0,026	47
1,5/4,5	AGM 132 M 12/4b	460/1470	9,3/10,8	31/29	0,40/0,75	58,0/80	2,3/6,3	1,7/1,9	2,3/3,7	0,032	56
1,8/5,5	AGM 160 M 12/4	480/1460	6,6/12	36/36	0,60/0,82	64,5/79,3	3,8/6,3	1,7/1,8	2,5/2,6	0,079	74
2,5/8	AGM 160 L 12/4	475/1460	9,5/17	50/52	0,53/0,83	69,4/80,4	3,2/6,8	1,4/1,6	2,0/2,6	0,11	95
3,7/11,5	AGM 180 L 12/4	480/1475	14/24	74/74	0,51/0,81	73,4/83,4	3,4/6,3	1,5/1,5	2,4/3,5	0,16	145
5/15	AGM 200 L 12/4a	480/1475	19/32	99/97	0,51/0,79	73,4/84,4	3,7/5,8	1,6/1,6	2,3/3,4	0,21	152
5,7/17	AGM 200 L 12/4b	480/1470	21/36	113/110	0,52/0,79	74,4/84,4	3,8/6,8	1,6/1,6	2,3/3,4	0,26	175

CAST IRON HOUSING

0,7/2,2	GM 132 S 12/4	460/1450	4,2/6,5	15/15	0,44/0,65	53,6/73,3	2,2/5,5	1,5/2,0	1,8/3,1	0,019	51
1,2/3,7	GM 132 M 12/4a	460/1450	6,5/8,5	25/24	0,48/0,78	54,7/79,2	2,2/5,7	1,5/2,0	1,8/3,2	0,026	60
1,5/4,5	GM 132 M 12/4b	460/1470	9,3/10,8	31/29	0,40/0,95	56,6/61,7	2,3/6,3	1,7/1,9	2,3/3,7	0,032	69
1,8/5,5	GM 160 M 12/4	480/1460	6,6/12	36/36	0,60/0,82	64,5/79,3	3,8/6,3	1,7/1,8	2,5/2,6	0,079	101
2,5/8	GM 160 L 12/4	475/1460	9,5/17	50/52	0,53/0,83	69,4/80,4	3,2/6,8	1,4/1,6	2,0/2,6	0,11	126
3,7/11,5	GM 180 L 12/4	480/1475	14/24	74/74	0,51/0,81	73,4/83,4	3,4/6,3	1,5/1,5	2,4/3,5	0,16	169
5/15	GM 200 L 12/4a	480/1475	19/32	99/97	0,51/0,79	73,4/84,4	3,7/5,8	1,6/1,6	2,3/3,4	0,21	202
5,7/17	GM 200 L 12/4b	480/1470	21/36	113/110	0,52/0,79	74,4/84,4	3,8/6,8	1,6/1,6	2,3/3,4	0,26	225
8/24	GM 225 M 12/4	490/1480	30/52	156/155	0,50/0,77	75,5/84,5	4,0/7,0	2,7/2,3	2,1/3,0	0,57	286

⚠ Two speed motors must first be started at low speed and then switched over to higher speed.

⚠ Above Dahlander connected motors are suitable for DOL starting only. Y/Δ starting is possible on request.

Efficiencies are calculated according to indirect method where the additional load losses are determined from exact measurements at different load points.
(IEC 60034-2-1 : 2014)

RATINGS AND PERFORMANCE

1500/3000 min^{-1}, Two Speed Motors
Suitable for applications where torque rises with the square of speed (like fans)
Single winding - Dahlander Connection Y/YY

3-phase, 400 V, 50 Hz
Duty type : S1 (continuous)
Degree of protection : IP 55
Insulation class : F (155°C)
Temp. Rise : Class B (80K)

Rated output	Type	Full-load data					Starting data		Breakdown torque ratio	Moment of inertia	Weight approx.
		Speed n	Current I_N	Torque M_N	Power Factor Cos φ	Efficiency η %	Locked-rotor current ratio I_A/I_N	Locked-rotor torque ratio M_A/M_N	M_K/M_N	J	B3
kW		min^{-1}	A	Nm		IEC 60034-2-1:2007 At 4/4	D.O.L.	D.O.L.		kgm^2	kg

4/2 pole, 1500/3000 min^{-1}

ALUMINIUM HOUSING

0,035/0,14	V. AGM 63 4/2a	1400/2860	0,20/0,50	0,24/0,47	0,51/0,62	48,4/63,2	3,2/4,5	2,1/2,4	2,4/2,8	0,00011	3,3
0,05/0,19	V. AGM 63 4/2b	1420/2880	0,22/0,60	0,34/0,63	0,66/0,74	48,5/60,3	3,4/4,8	2,3/2,7	2,6/3,0	0,00013	3,7
0,08/0,37	V. AGM 71 4/2a	1380/2800	0,32/1,1	0,55/1,26	0,69/0,84	50,5/56,5	2,5/3,5	1,4/1,5	1,6/1,7	0,00026	5,1
0,12/0,5	V. AGM 71 4/2b	1380/2800	0,45/1,4	0,83/1,71	0,73/0,81	51,5/62,3	3,0/3,8	1,6/1,8	1,8/2,0	0,00034	6,3
0,17/0,75	V. AGM 80 4/2a	1400/2790	0,50/1,7	1,2/2,6	0,77/0,91	62,2/68,3	3,5/4,1	1,6/1,7	1,9/1,9	0,00053	7,8
0,25/1,0	V. AGM 80 4/2b	1410/2810	0,70/2,2	1,7/3,4	0,75/0,98	67,1/65,4	3,3/3,6	1,4/1,6	1,7/1,9	0,00066	8,9
0,33/1,3	V. AGM 90 S 4/2	1425/2860	0,90/2,8	2,2/4,3	0,74/0,87	70,1/75,2	3,7/4,4	1,6/1,8	2,0/1,9	0,0011	11,4
0,5/2,0	V. AGM 90 L 4/2	1415/2835	1,2/4,2	3,4/6,7	0,78/0,88	75,0/76,2	4,5/6,0	2,0/1,8	2,4/2,5	0,0014	13,8
0,66/2,7	V. AGM 100 L 4/2	1430/2845	1,5/5,2	4,4/9,1	0,81/0,95	76,0/77,2	4,9/4,7	1,7/1,9	2,3/2,1	0,0024	17,3
0,9/3,6	V. AGM 112 M 4/2	1440/2870	2/7,3	6,0/12	0,83/0,89	76,1/78,3	5,5/6,0	1,8/2,0	2,6/2,5	0,0039	27
1,25/5	V. AGM 132 S 4/2a	1440/2860	3/9,8	8,3/16,7	0,81/0,93	75,2/77,3	4,3/4,9	1,8/2,1	2,1/2,2	0,0090	33
1,7/6,5	V. AGM 132 S 4/2b	1440/2900	3,6/12,5	11,3/21,4	0,84/0,89	79,1/82,3	5,8/6,8	2,3/2,3	2,5/2,7	0,012	39
2,5/10	V. AGM 160 M 4/2a	1450/2910	5,3/19,5	16/33	0,84/0,90	79,2/80,4	5,0/5,3	2,1/2,5	2,2/2,7	0,026	62
3,3/13	V. AGM 160 M 4/2b	1460/2930	6,7/24	22/42	0,85/0,91	82,2/84,4	6,8/8,6	2,2/2,5	2,9/3,3	0,034	73
4,4/17	V. AGM 160 L 4/2	1460/2930	8,6/32	29/55	0,87/0,89	83,2/84,4	6,9/8,8	2,4/2,6	2,7/3,0	0,041	86
5/20	V. AGM 180 M 4/2	1475/2940	10/37	32/65	0,87/0,90	81,3/85,4	6,7/7,7	2,6/2,4	2,7/2,7	0,060	125
7,5/28	V. AGM 200 L 4/2a	1470/2960	15/50	49/90	0,85/0,92	83,3/86,5	6,4/7,5	2,3/2,1	2,3/2,4	0,10	165
8,5/33	V. AGM 200 L 4/2b	1470/2950	16/59	55/107	0,87/0,90	86,2/88,5	6,8/7,6	2,1/1,9	2,2/2,1	0,13	185

CAST IRON HOUSING

1,25/5	V. GM 132 S 4/2a	1440/2860	3/9,8	8,3/16,7	0,78/0,93	75,2/77,3	4,3/4,9	1,8/2,1	2,1/2,2	0,0090	45
1,7/6,5	V. GM 132 S 4/2b	1440/2900	3,6/12,5	11,3/21,4	0,84/0,89	79,1/82,3	5,8/6,8	2,3/2,3	2,5/2,7	0,012	52
2,5/10	V. GM 160 M 4/2a	1450/2910	5,3/19,5	16,5/32,8	0,84/0,90	79,2/80,4	5,0/5,3	2,1/2,5	2,2/2,7	0,026	94
3,3/13	V. GM 160 M 4/2b	1460/2930	6,7/24	21,6/42,4	0,85/0,91	82,2/84,4	6,8/8,6	2,2/2,5	2,9/3,3	0,034	105
4,4/17	V. GM 160 L 4/2	1460/2930	8,6/32	28,8/55,4	0,87/0,89	83,2/84,4	6,9/8,8	2,4/2,6	2,7/3,0	0,041	118
5/20	V. GM 180 M 4/2	1475/2940	10/37	32,4/65	0,87/0,90	81,3/85,4	6,7/7,7	2,6/2,4	2,7/2,7	0,060	150
7,5/28	V. GM 200 L 4/2a	1470/2960	15/50	48,7/90,3	0,85/0,92	83,3/86,5	6,4/7,5	2,3/2,1	2,3/2,4	0,10	215
8,5/33	V. GM 200 L 4/2b	1470/2950	16/59	55/107	0,87/0,90	86,2/88,5	6,8/7,6	2,1/1,9	2,2/2,1	0,13	235
10/40	V. GM 225 M 4/2	1470/2955	20/72	65/129	0,82/0,91	86,3/86,5	5,5/6,5	2,0/1,8	2,1/2,4	0,19	315
12,5/48	V. GM 250 M 4/2	1480/2965	25/86	81/155	0,81/0,90	87,3/88,5	5,7/7,5	2,0/2,1	2,1/2,4	0,32	385
17/66	V. GM 280 S 4/2	1480/2970	33/115	110/212	0,83/0,91	88,3/89,6	6,2/7,9	2,0/2,1	2,2/2,6	0,50	560
20/78	V. GM 280 M 4/2	1480/2970	38/133	129/251	0,84/0,93	88,4/89,6	6,7/8,2	2,0/2,1	2,3/2,7	0,62	595
25/100	V. GM 315 S 4/2	1485/2975	48/172	161/321	0,84/0,92	88,4/89,7	6,5/7,9	1,4/1,7	2,4/2,7	0,96	720
30/120	V. GM 315 M 4/2a	1490/2980	58/205	192/385	0,82/0,92	89,4/90,7	8,0/8,8	1,6/1,9	2,6/2,9	1,20	805
37/150	V. GM 315 M 4/2b	1490/2980	68/252	237/481	0,84/0,92	91,4/91,7	6,5/8,2	1,6/1,9	2,5/2,8	1,40	870
45/175	V. GMM 315 L 4/2	1490/2980	83/295	288/561	0,84/0,92	91,5/91,7	6,7/8,2	1,6/1,9	2,5/2,8	1,42	920

⚠ Two speed motors must first be started at low speed and then switched over to higher speed.

⚠ Above Dahlander connected motors are suitable for DOL starting only. Y/Δ starting is possible on request.

Efficiencies are calculated according to indirect method where the additional load losses are determined from exact measurements at different load points. (IEC 60034-2-1 : 2014)

750/1500 min^{-1}, Two Speed Motors
Suitable for applications where torque rises with the square of speed (like fans)
Single winding - Dahlander Connection Y/YY

3-phase, 400 V, 50 Hz
Duty type : S1 (continuous)
Degree of protection : IP 55
Insulation class : F (155ºC)
Temp. Rise : Class B (80K)

Rated output	Type	Full-load data					Starting data		Breakdown torque ratio	Moment of inertia	Weight approx.
		Speed n	Current I_N	Torque M_N	Power Factor Cos φ	Efficiency η %	Locked-rotor current ratio I_A/I_N	Locked-rotor torque ratio M_A/M_N	M_K/M_N	J	B3
kW		min^{-1}	A	Nm		IEC 60034-2-1:2007 At 4/4	D.O.L.	D.O.L.		kgm^2	kg

8/4 pole, 750/1500 min^{-1}

ALUMINIUM HOUSING

0,05/0,25	V. AGM 71 8/4a	680/1400	0,28/0,73	0,7/1,7	0,60/0,78	41,7/61,3	2,0/3,1	1,4/1,3	1,8/1,8	0,00040	4,9
0,065/0,33	V. AGM 71 8/4b	680/1400	0,36/1	0,9/2,3	0,58/0,76	43,6/61,3	2,0/3,2	1,4/1,4	1,8/1,9	0,00054	5,9
0,12/0,5	V. AGM 80 8/4a	680/1430	0,65/1,5	1,7/3,3	0,51/0,75	50,5/62,3	2,1/3,2	1,4/1,7	1,7/2,1	0,00083	7,6
0,18/0,75	V. AGM 80 8/4b	680/1405	0,90/2	2,5/5,1	0,54/0,81	51,5/65,3	2,1/3,5	1,6/1,7	1,8/2,1	0,0011	8,7
0,25/1	V. AGM 90 S 8/4	700/1410	1,2/2,8	3,4/6,8	0,51/0,69	57,4/73,2	2,7/4,6	1,6/2,1	2,1/2,4	0,0019	11,5
0,33/1,4	V. AGM 90 L 8/4	690/1390	1,3/3,3	4,6/9,6	0,60/0,79	59,4/76,2	2,6/4,3	1,7/1,8	1,9/2,1	0,0024	13,6
0,5/2	V. AGM 100 L 8/4a	700/1415	1,8/4,8	7/13	0,61/0,82	64,3/71,3	2,9/4,8	1,5/1,8	2,1/2,3	0,0038	17,3
0,6/2,5	V. AGM 100 L 8/4b	690/1410	2/5,5	8/17	0,66/0,86	64,3/74,3	3,2/5,2	1,5/1,9	2,0/2,3	0,0050	20,8
1/3,8	V. AGM 112 M 8/4	700/1425	3,2/8,3	14/25	0,63/0,83	70,2/78,3	3,4/5,2	1,4/2,0	2,0/2,5	0,0092	28,7
1,2/5	V. AGM 132 S 8/4	715/1450	3,8/10,5	16/33	0,60/0,84	74,2/80,3	3,7/5,4	2,1/2,2	2,4/2,6	0,019	39
1,7/7	V. AGM 132 M 8/4	710/1450	5,2/14,5	23/46	0,66/0,84	69,3/81,3	4,0/6,6	2,0/2,2	2,2/2,5	0,026	47
2,5/10	V. AGM 160 M 8/4	720/1460	7,4/20	33/65	0,64/0,87	74,3/81,4	3,7/6,4	1,8/2,3	2,2/3,0	0,054	74
3,5/14	V. AGM 160 L 8/4	720/1460	10,5/28	46/92	0,60/0,83	78,3/85,4	3,7/6,8	1,8/2,0	2,0/2,5	0,072	104
4/16	V. AGM 180 M 8/4	720/1465	11,4/32	53/104	0,63/0,82	79,3/86,4	3,8/6,0	1,8/2,3	1,8/2,4	0,11	128
5/20	V. AGM 180 L 8/4	720/1465	14/40	66/130	0,62/0,81	81,3/87,4	3,9/6,7	1,9/2,5	1,9/2,7	0,13	143
7/28	V. AGM 200 L 8/4	725/1465	16/51	92/183	0,73/0,88	84,2/88,4	4,5/6,6	1,9/2,1	1,9/2,4	0,19	185

CAST IRON HOUSING

1,2/5	V. GM 132 S 8/4	715/1450	3,8/10,5	16/33	0,60/0,84	74,2/80,3	3,7/5,4	2,1/2,2	2,4/2,6	0,019	51
1,7/7	V. GM 132 M 8/4	710/1450	5,2/14,5	23/46	0,66/0,84	69,3/81,3	4,0/6,6	2,0/2,2	2,2/2,5	0,026	60
2,5/10	V. GM 160 M 8/4	720/1460	7,4/20	33/65	0,64/0,87	74,3/81,4	3,7/6,4	1,8/2,3	2,2/3,0	0,054	105
3,5/14	V. GM 160 L 8/4	720/1460	10,5/28	46/92	0,60/0,83	78,3/85,4	3,7/6,8	1,8/2,0	2,0/2,5	0,072	140
4/16	V. GM 180 M 8/4	720/1465	11,4/32	53/104	0,63/0,82	79,3/86,4	3,8/6,0	1,8/2,3	1,8/2,4	0,11	150
5/20	V. GM 180 L 8/4	720/1465	14/40	66/130	0,62/0,81	81,3/87,4	3,9/6,7	1,9/2,5	1,9/2,7	0,13	170
7/28	V. GM 200 L 8/4	725/1465	16/51	92/183	0,73/0,88	84,2/88,4	4,5/6,6	1,9/2,1	1,9/2,4	0,19	235
8/32	V. GM 225 S 8/4	730/1470	20/60	105/208	0,67/0,86	84,3/88,5	4,3/6,6	2,0/2,3	2,1/2,7	0,29	275
10/40	V. GM 225 M 8/4	725/1470	26/71	132/260	0,65/0,92	83,3/86,5	4,0/6,3	1,8/2,3	1,8/2,4	0,35	320
12,5/48	V. GM 250 M 8/4	735/1475	30/87	162/311	0,70/0,88	84,4/89,5	4,3/7,1	2,0/2,5	1,9/2,9	0,54	395
16,5/63	V. GM 280 S 8/4	730/1475	38/115	216/408	0,70/0,88	87,3/88,6	3,8/6,3	1,6/2,2	1,8/2,4	0,90	550
21/83	V. GM 280 M 8/4	735/1475	50/149	273/537	0,67/0,87	88,4/90,6	3,9/6,9	1,6/2,3	1,8/2,5	1,1	615
25/100	V. GM 315 S 8/4	740/1485	53/174	323/643	0,74/0,89	90,4/91,6	4,7/6,9	1,7/2,2	1,8/2,4	1,6	702
30/120	V. GM 315 M 8/4a	740/1480	69/223	387/774	0,68/0,83	90,4/92,6	5,3/8,1	1,8/2,6	2,0/2,9	2,1	784
33/132	V. GM 315 M 8/4b	740/1485	74/239	426/849	0,70/0,85	90,4/92,7	5,2/8,1	1,8/2,4	2,0/2,8	2,5	861
40/160	V. GMM 315 L 8/4	740/1485	86/274	516/1029	0,73/0,90	90,5/92,7	5,2/8,1	1,8/2,4	2,0/2,8	2,3	875

⚠ Two speed motors must first be started at low speed and then switched over to higher speed.

⚠ Above Dahlander connected motors are suitable for DOL starting only. Y/Δ starting is possible on request.

Efficiencies are calculated according to indirect method where the additional load losses are determined from exact measurements at different load points.
(IEC 60034-2-1 : 2014)

RATINGS AND PERFORMANCE

1000/1500 min^{-1}, Two Speed Motors
Suitable for applications where torque rises with the square of speed (like fans)
Two separate windings Y/Y

3-phase, 400 V, 50 Hz
Duty type : S1 (continuous)
Degree of protection : IP 55
Insulation class : F (155ºC)
Temp. Rise : Class B (80K)

Rated output	Type	Full-load data					Starting data		Breakdown torque ratio	Moment of inertia	Weight approx.
		Speed n	Current I_N	Torque M_N	Power Factor Cos φ	Efficiency η % IEC 60034-2-1:2007 At 4/4	Locked-rotor current ratio I_A/I_N	Locked-rotor torque ratio M_A/M_N	M_K/M_N	J	B3
kW		min^{-1}	A	Nm			D.O.L.	D.O.L.		kgm^2	kg

6/4 pole, 1000/1500 min^{-1}

ALUMINIUM HOUSING

0,05/0,18	V. AGM 71 6/4a	940/1340	0,34/0,72	0,51/1,28	0,42/0,56	48,5/63,2	2,0/2,1	1,4/1,3	1,9/1,6	0,00064	5,4
0,08/0,24	V. AGM 71 6/4b	940/1350	0,40/0,9	0,81/1,7	0,58/0,65	48,5/60,3	2,3/2,5	1,5/1,4	1,9/1,6	0,00086	6,3
0,15/0,45	V. AGM 80 6/4a	930/1370	0,54/1,3	1,54/3,14	0,77/0,81	50,5/60,4	3,2/3,2	1,7/1,4	2,1/1,5	0,0017	8,1
0,2/0,6	V. AGM 80 6/4b	960/1400	0,74/1,52	2,03/4,09	0,67/0,80	56,4/69,2	3,7/3,8	2,1/1,6	2,7/2,0	0,0022	9,5
0,3/0,9	V. AGM 90 S 6/4	940/1410	1,1/2,3	3,05/6,1	0,70/0,78	54,5/70,2	2,9/4,3	1,3/1,9	1,9/2,1	0,0019	11,5
0,37/1,1	V. AGM 90 L 6/4	935/1390	1,2/2,8	3,8/7,6	0,71/0,78	61,3/71,2	3,2/4,0	1,6/1,6	2,0/2,1	0,0024	13,6
0,6/1,6	V. AGM 100 L 6/4a	950/1420	1,85/4,1	6/10,8	0,73/0,79	62,4/69,3	3,6/5,2	1,6/2,1	2,2/2,3	0,0040	17,3
0,75/2,2	V. AGM 100 L 6/4b	950/1430	2,5/5,3	7,5/14,7	0,68/0,80	62,4/73,3	3,6/4,7	1,7/1,7	2,2/2,3	0,0052	20,8
1,1/3,3	V. AGM 112 M 6/4	955/1440	3,1/7,3	11/21,9	0,70/0,81	71,2/79,2	5,0/5,8	1,9/2,1	2,9/2,7	0,0092	28,7
1,5/4,5	V. AGM 132 S 6/4	940/1440	4,2/9,5	15,2/29,8	0,75/0,84	67,4/79,3	4,1/5,5	1,7/1,8	2,1/2,0	0,019	39
2/6,2	V. AGM 132 M 6/4	940/1440	5,2/13,3	20,3/41,1	0,77/0,86	70,3/76,4	4,0/5,2	1,7/2,0	1,9/2,2	0,026	47
3/9	V. AGM 160 M 6/4	945/1455	7/18	30,3/59,1	0,78/0,84	77,3/84,3	4,6/6,0	1,8/2,0	1,9/2,3	0,054	74
4/13	V. AGM 160 L 6/4	970/1455	9,5/26	39,4/85,3	0,75/0,84	79,3/84,4	4,0/5,5	1,9/2,1	1,9/2,2	0,072	104
5/15	V. AGM 180 M 6/4	970/1460	11,7/29	49/98	0,74/0,85	81,3/86,3	4,4/5,9	1,8/2,2	1,9/2,2	0,11	128
6/18,5	V. AGM 180 L 6/4	975/1455	14/36	59/121	0,75/0,85	80,3/85,4	5,4/5,5	2,4/2,1	2,5/2,3	0,13	143
7,5/25	V. AGM 200 L 6/4	980/1465	16,6/48	73/163	0,79/0,86	81,3/85,5	6,0/6,6	2,2/2,2	2,9/2,8	0,19	185
9/30	V.C.AGM 200 L 6/4	980/1470	19/51	88/195	0,78/0,94	86,3/88,4	6,7/7,0	2,6/2,3	2,9/2,5	0,23	205

CAST IRON HOUSING

1,5/4,5	V. GM 132 S 6/4	940/1440	4,2/9,5	15,2/29,8	0,75/0,84	67,4/79,3	4,1/5,5	1,7/1,8	2,1/2,0	0,019	51
2/6,2	V. GM 132 M 6/4	940/1440	5,2/13,3	20,3/41,1	0,77/0,86	70,3/76,4	4,0/5,2	1,7/2,0	1,9/2,2	0,026	60
3/9	V. GM 160 M 6/4	945/1455	7/18	30,3/59,1	0,78/0,84	77,3/84,3	4,6/6,0	1,8/2,0	1,9/2,3	0,054	105
4/13	V. GM 160 L 6/4	970/1455	9,5/26	39,4/85,3	0,75/0,84	79,3/84,4	4,0/5,5	1,9/2,1	1,9/2,2	0,072	140
5/15	V. GM 180 M 6/4	970/1460	11,7/29	49,2/98,1	0,74/0,85	81,3/86,3	4,4/5,9	1,8/2,2	1,9/2,2	0,11	150
6/18,5	V. GM 180 L 6/4	975/1455	14/36	58,8/121,4	0,75/0,85	80,3/85,4	5,4/5,5	2,4/2,1	2,5/2,3	0,13	170
7,5/25	V. GM 200 L 6/4	980/1465	16,6/48	73/163	0,79/0,86	81,3/85,5	6,0/6,6	2,2/2,2	2,9/2,8	0,19	235
9/30	V.C.GM 200 L 6/4	940/1470	19/54	88/195	0,78/0,89	86,3/88,4	6,7/7,0	2,6/2,3	2,9/2,5	0,23	255
11/33	V. GM 225 S 6/4	980/1470	25/67	107/214	0,73/0,80	85,3/87,5	5,0/6,4	1,8/2,1	2,2/2,8	0,29	275
14/40	V. GM 225 M 6/4	980/1470	30/77	136/260	0,78/0,83	84,4/88,5	4,7/6,1	1,8/2,0	2,3/3,0	0,35	320
17/50	V. GM 250 M 6/4	980/1475	36/92	166/324	0,80/0,85	83,4/90,5	5,2/7,2	2,0/2,5	2,4/3,1	0,54	395
22/65	V. GM 280 S 6/4	985/1480	46/116	213/419	0,78/0,91	87,4/87,6	6,6/5,4	2,3/1,7	2,3/1,8	0,90	550
26/75	V. GM 280 M 6/4	990/1480	56/137	251/484	0,75/0,89	87,4/87,6	6,8/5,5	2,5/1,6	2,5/1,7	1,1	615
32/95	V. GM 315 S 6/4	990/1480	63/164	309/613	0,81/0,90	89,4/91,6	6,7/6,0	2,2/1,7	2,5/2,2	1,6	702
37/115	V. GM 315 M 6/4a	990/1485	74/200	357/740	0,79/0,88	89,5/92,6	8,0/7,0	2,5/1,8	2,9/2,6	2,1	784
45/132	V. GM 315 M 6/4b	990/1485	91/223	434/849	0,78/0,91	90,5/92,7	8,0/6,5	2,5/1,8	2,9/2,5	2,5	861
50/150	V. GMM 315 L 6/4	990/1485	98/257	482/965	0,80/0,90	90,5/92,7	7,0/6,2	2,2/1,7	2,6/2,3	2,3	875

⚠ Two speed motors must first be started at low speed and then switched over to higher speed.

⚠ Above Dahlander connected motors are suitable for DOL starting only. Y/Δ starting is possible on request.

Efficiencies are calculated according to indirect method where the additional load losses are determined from exact measurements at different load points. (IEC 60034-2-1 : 2014)

DIMENSIONS

	Page
FOOT MOUNTED (B3) MOTORS	43-44
D-FLANGE MOUNTED (B5) MOTORS	45-46
FOOT AND D-FLANGE MOUNTED (B35) MOTORS	47-48
C-FLANGE MOUNTED (B14) MOTORS	49-50
FOOT AND C-FLANGE MOUNTED (B34) MOTORS	51-52
SPARES	53

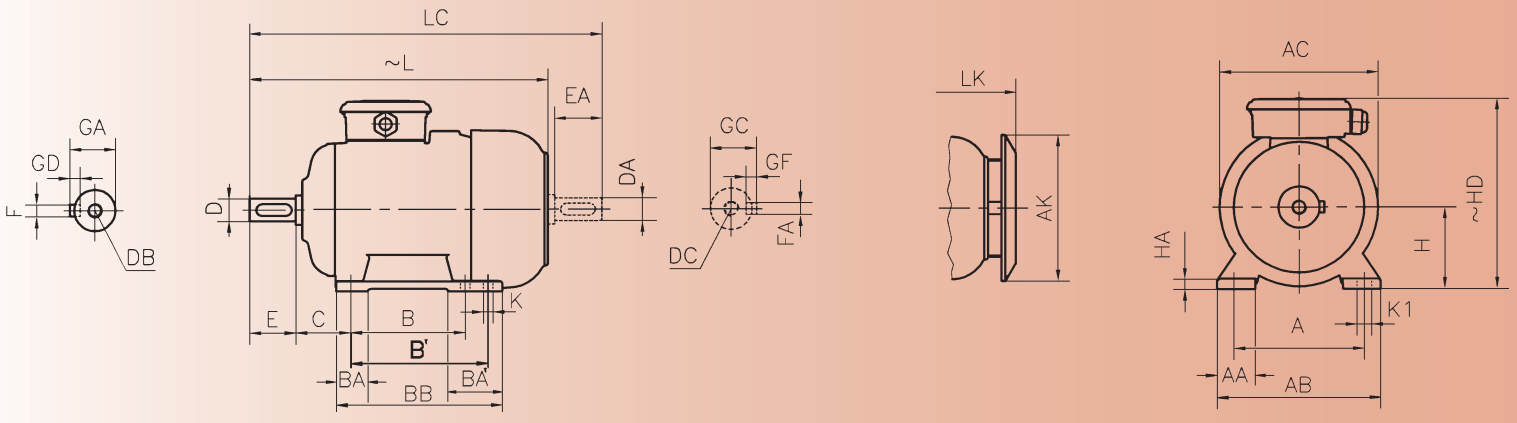

FOOT MOUNTED (B3) - ALUMINIUM HOUSING

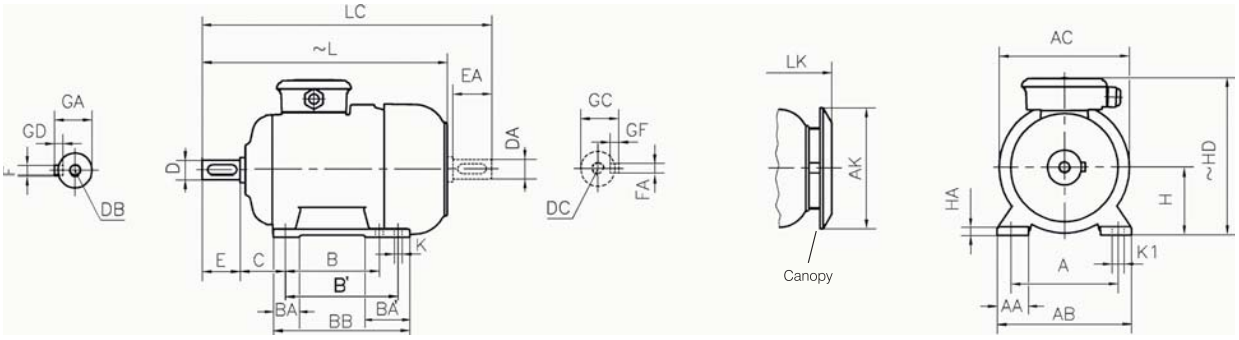

Frame size		Number of pole	Dimensions of foot mounted motors for mounting arrangements : B3, B6, B7, B8 , B15, V5 , V6																							
			H	HD ~	HA	A	AA	AB	ØAC	ØAK	K	K1	B	B'	BA	BA'	BB	L ~	LC	LK ~	C	E EA	DB[1] DC	Ø D Ø DA	GA GC	FxGD FAxGF
56		2-4	56	152	9	90	28	112	105	-	5,8	9	71	-	24	-	87	161	185	-	36	20	M4	9	10.2	3X3
63		2-4	63	160	10	100	31	125	121	116	7	11	80	-	27	-	103	216	243	245	40	23	M4	11	12.5	4X4
71		2-4-6-8	71	182	10	112	33	140	138	116	7	11	90	-	27	-	108	249	284	278	45	30	M5	14	16	5X5
80		2-4-6-8	80	198	10	125	38	160	156	151	10	15	100	-	33	-	125	279	324	308	50	40	M6	19	21.5	6X6
90	S	2-4-6-8	90	216	12	140	43	180	176	151	10	15	100	-	35	-	130	309	364	338	56	50	M8	24	27	8X7
	L	2-4-6-8											125	-			155	334	389	363						
		4[2]																360	415	389						
100	L	2-4-6-8	100	234	13	160	47	200	194	189	12	18	140	-	39	-	175	376	442	413	63	60	M10	28	31	8X7
		4[3]																406	472	443						
112	M	2-4-6-8	112	257	13	190	47	230	218	189	12	18	140	-	39	-	175	396	462	433	70	60	M10	28	31	8X7
		4[4]																421	487	458						
132	S	2-4-6-8	132	300	15	216	49	260	257	239	12	18	140	-	46	-	180	460	546	497	89	80	M12	38	41	10X8
	M	2-4-6-8											178	-			218	498	584	535						
		4-6[5]																523	614	560						
160	M	2-4-6-8	160	380	21,5	254	60	312	310	303	15	19	210	254	60	104	304	600	716	657	108	110	M16	42	45	12x8
	L	2-4[6]																644	760	701						
180	M / L	2-4-6-8	180	421	24	279	68	354	348	303	15	19	241	279	57	95	320	657	773	714	121	110	M16	48	51.5	14x9
200	L	2-4-6-8	200	477	26	318	80	398	390	370	19	24	305	-	68	-	355	747	865	803	133	110	M20	55	59	16x10
Tolerances			-0.5																					j6		

[1] DB, DC : DIN 332-2 Form D
[2] IE3 motor type AGM3E 90 L 4
[3] IE2&IE3 motor type AGM2E 100 L 4b, AGM3E 100 L 4b
[4] IE3 motor type AGM3E 112 M 4
[5] IE2&IE3 motor type AGM2E 132 M 6b, AGM3E 132 M 6b
[6] IE2 motor type AGM2E 160 L 2, AGM2E 160 L 4

All dimensions in mm.

FOOT MOUNTED (B3) - CAST IRON HOUSING

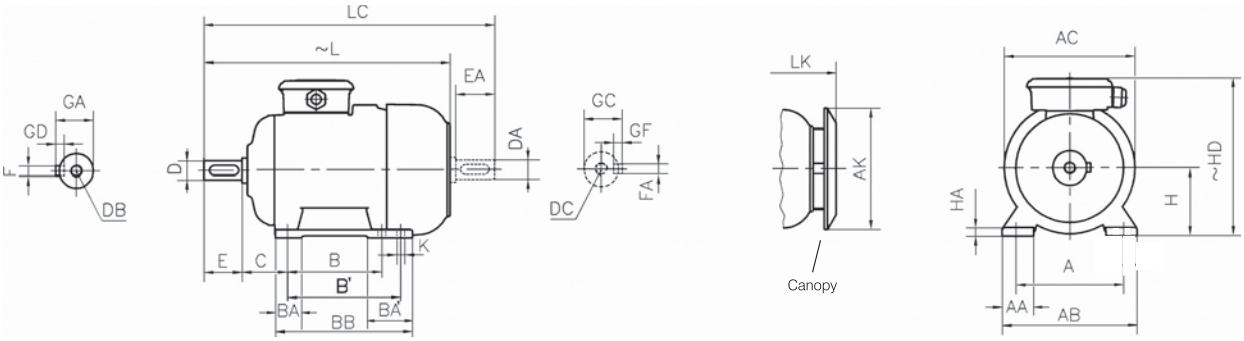

Frame size		Number of pole	Dimensions of foot mounted motors for mounting arrangements : B3, B6[1], B7[1], B8[1], B15, V5[1], V6[1]																						
			H	HD ~	HA	A	AA	AB	AC Ø	AK Ø	K Ø	B	B'	BA	BA'	BB	L ~	LC	LK ~	C	E EA	DB[2] DC	D Ø DA Ø	GA GC	FxGD FAxGF
132	S	2-4-6-8	132	300	15	216	52	260	257	239	12	140	-	46	84	218	498	584	535	89	80	M12	38	41	10X8
	M											-	178												
160	M	2-4-6-8	160	380	22	254	60	312	310	303	15	210	-	62	-	260	600	716	657	108	110	M16	42	45	12X8
	L											254	-			304	644	760	701						
180	M	2-4-6-8	180	421	24	279	68	354	348	303	15	241	279	57	85	319	657	773	714	121	110	M16	48	51.5	14X9
	L											279	-	62	-	329	695	811	752						
200	L	2-4-6-8	200	477	26	318	80	398	390	370	19	305	-	68	-	355	747	865	803	133	110	M20	55	59	16X10
225	S	4-8	225	510	30	356	82	438	434	370	19	286	311	76	92,5	363	795	943	851	149	140	M20	60	64	18X11
	M	2										311	-		-	371	790	908	846		110		55	59	16X10
		4-6-8															820	968	876		140		60	64	18X11
250	M	2	250	572	35	406	80	484	480	440	24	349	-	75	-	410	896	1044	952	168	140	M20	60	64	18X11
		4-6-8																					65	69	
280	S	2	280	630	40	457	120	550	544	440	24	368	-	85	128	474	958	1106	1014	190	140	M20	65	69	18X11
		4-6-8																					75	79,5	20X12
	M	2										-	419										65	69	18X11
		4-6-8																					75	79,5	20X12
315	S	2	315	825	50	508	125	620	614	571	28	406	-	115	166	550	1120	1270	1197	216	140	M20	65	69	18X11
		4-6-8															1150	1330	1227		170		85	90	22X14
	M	2										-	457				1120	1270	1197		140		65	69	18X11
		4-6-8															1150	1330	1227		170		85	90	22X14
	L	2										508	-	125	-	600	1190	1340	1267		140		65	69	18X11
		4-6-8															1220	1400	1297		170		85	90	22X14
355	M	2	355	980	50	610	150	740	732	571	28	560	-	140	-	680	1337	1517	1414	254	170	M20	80	85	22X14
		4-6-8															1377	1597	1454		210	M24	100	106	28X16
	L	2										630				750	1467	1647	1544		170	M20	80	85	22X14
		4-6-8															1507	1727	1584		210	M24	100	106	28X16
400	L	2	400	1100	50	686	165	860	850	571	35	800	-	170	-	844	1560	1740	1637	280	170	M20	80	85	22X14
		4-6-8															1600	1820	1677		210	M24	110	116	28X16
450	L	2	450	1201	62	800	180	975	960	571	45	900	-	200	-	1050	1768	1948	1845	280	170	M24	90	95	25X14
		4-6-8															1808	2028	1885		210		120	127	32X18
450	LH	2	450	1283	62	800	180	975	960	571	45	1250	-	300	-	1450	2268	2486	2345	280	170	M24	90	95	25X14
		4-6-8															2308	2528	2385		210		120	127	32X18
Tolerances			-0.5																				k6		
			-1																				m6		

[1] B6, B7, B8, V5 and V6 are up to frame size 315 M
[2] DB, DC : DIN 332-2 Form D

All dimensions in mm.

FLANGE MOUNTED (FORM A-B5) - ALUMINIUM HOUSING

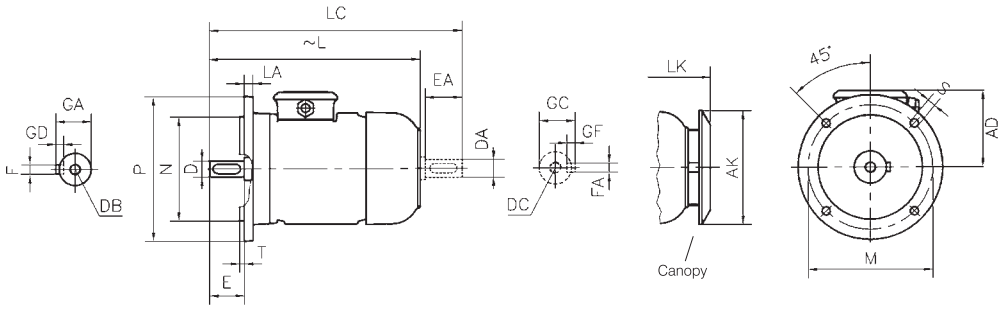

Note: The seating face of the flange lies in the same plane as the shoulder on the shaft

Frame size	Number of pole	Dimensions of flanged motors : (D-Flange form A - DIN EN 50 347) mounting arrangements B5, V1, V3																	
		Flange No.	ØM	ØN	ØP	Clearance hole No.	Clearance hole ØS	T	LA	AD ~	ØAK	L ~	LC	LK ~	E EA	DB[1] DC	ØD ØDA	GA GC	FxGD FAxGF
56	2-4	FF 100	100	80	120	4	7	3	8	96	-	161	185	-	20	M4	9	10.2	3X3
63	2-4	FF 115	115	95	140	4	10	3	10	97	116	216	243	245	23	M4	11	12.5	4X4
71	2-4-6-8	FF 130	130	110	160	4	10	3.5	10	110	116	249	284	278	30	M5	14	16	5X5
80	2-4-6-8	FF 165	165	130	200	4	12	3.5	12	118	151	279	324	308	40	M6	19	21.5	6X6
90 S	2-4-6-8	FF 165	165	130	200	4	12	3.5	12	126	151	309	364	338	50	M8	24	27	8X7
90 L	2-4-6-8											334	389	363					
90 L	4[3]											360	415	389					
100 L	2-4-6-8	FF 215	215	180	250	4	14.5	4	15	135	189	376	442	413	60	M10	28	31	8X7
100 L	4[4]											406	472	443					
112 M	2-4-6-8	FF 215	215	180	250	4	14.5	4	15	146	189	396	462	433	60	M10	28	31	8X7
112 M	4[5]											425	487	458					
132 S	2-4-6-8	FF 265	265	230	300	4	14.5	4	20	168	239	460	546	497	80	M12	38	41	10X8
132 M	2-4-6-8											498	584	535					
132 M	6[6]											523	614	560					
160 M	2-4-6-8	FF 300[2]	300	250	350	4	18.5	5	20	225	303	600	716	657	110	M16	42	45	12X8
160 L	2-4-6-8											644	760	701					
160 L	2-4[7]																		
180 M / L	2-4-6-8	FF 300[2]	300	250	350	4	18.5	5	20	241	303	657	773	714	110	M16	48	51.5	14X9
200 L	2-4-6-8	FF350[2]	350	300	400	4	18.5	5	20	275	370	747	865	803	110	M20	55	59	16x10
Tolerances				j6													m6		

j6

k6

[1] DB, DC : DIN 332-2 Form D
[2] Flanges are cast iron.
[3] IE3 motor type AGM3E 90 L 4
[4] IE2&IE3 motor type AGM2E 100 L 4b, AGM3E 100 L 4b
[5] IE3 motor type AGM3E 112 M 4
[6] IE2&IE3 motor type AGM2E 132 M 6b, AGM3E 132 M 6b
[7] IE2 motor type AGM2E 160 L 2, AGM2E 160 L 4

All dimensions in mm.

FLANGE MOUNTED (FORM A-B5) - CAST IRON HOUSING

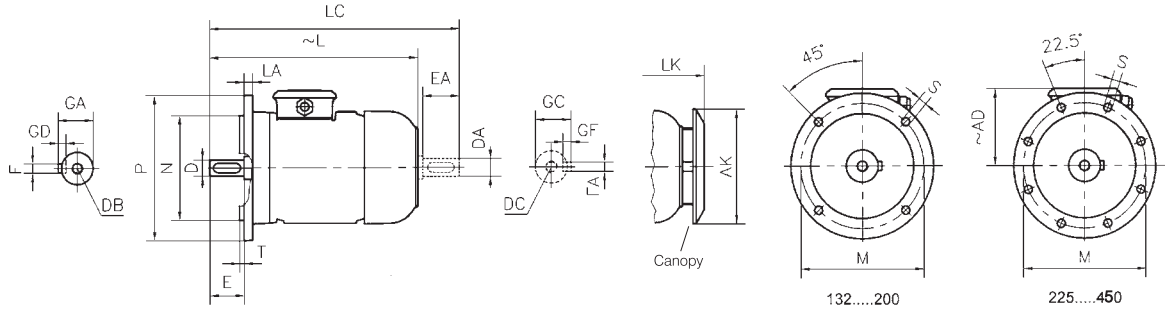

Note: The seating face of the flange lies in the same plane as the shoulder on the shaft

Frame size		Number of pole	Dimensions of flanged motors : (D-Flange form A - DIN EN 50 347) mounting arrangements B5[1], V1, V3[1]																	
			Flange No.	ØM	ØN	ØP	Clearance hole No.	Clearance hole ØS	T	LA	AD ~	Ø AK	L ~	LC	LK ~	E EA	DB[2] DC	Ø D Ø DA	GA GC	FxGD FAxGF
132	S	2-4-6-8	FF 265	265	230	300	4	14,5	4	20	168	239	498	584	535	80	M12	38	41	10X8
132	M	2-4-6-8	FF 265	265	230	300	4	14,5	4	20	168	239	498	584	535	80	M12	38	41	10X8
160	M	2-4-6-8	FF 300	300	250	350	4	18,5	5	20	225	303	600	716	657	110	M16	42	45	12X8
160	L	2-4-6-8	FF 300	300	250	350	4	18,5	5	20	225	303	644	760	701	110	M16	42	45	12X8
180	M	2-4-6-8	FF 300	300	250	350	4	18,5	5	20	241	303	657	773	714	110	M16	48	51,5	14X9
180	L	2-4-6-8	FF 300	300	250	350	4	18,5	5	20	241	303	695	811	752	110	M16	48	51,5	14X9
200	L	2-4-6-8	FF 350	350	300	400	4	18,5	5	20	275	370	747	865	803	110	M20	55	59	16X10
225	S	4-8	FF 400	400	350	450	8	18,5	5	20	285	370	795	943	851	140	M20	60	64	18X11
225	M	2	FF 400	400	350	450	8	18,5	5	20	285	370	790	908	846	110	M20	55	59	16X10
225	M	4-6-8	FF 400	400	350	450	8	18,5	5	20	285	370	820	968	876	140	M20	60	64	18X11
250	M	2	FF 500	500	450	550	8	18,5	5	24	322	440	896	1044	952	140	M20	60	64	18X11
250	M	4-6-8	FF 500	500	450	550	8	18,5	5	24	322	440	896	1044	952	140	M20	65	69	18X11
280	S	2	FF 500	500	450	550	8	18,5	5	24	350	440	958	1106	1014	140	M20	65	69	18X11
280	S	4-6-8	FF 500	500	450	550	8	18,5	5	24	350	440	958	1106	1014	140	M20	75	79.5	20X12
280	M	2	FF 500	500	450	550	8	18,5	5	24	350	440	958	1106	1014	140	M20	65	69	18X11
280	M	4-6-8	FF 500	500	450	550	8	18,5	5	24	350	440	958	1106	1014	140	M20	75	79.5	20X12
315	S	2	FF 600	600	550	660	8	24	6	24	510	571	1120	1270	1197	140	M20	65	69	18X11
315	S	4-6-8	FF 600	600	550	660	8	24	6	24	510	571	1150	1330	1227	170	M20	85	90	22X14
315	M	2	FF 600	600	550	660	8	24	6	24	510	571	1120	1270	1197	140	M20	65	69	18X11
315	M	4-6-8	FF 600	600	550	660	8	24	6	24	510	571	1150	1330	1227	170	M20	85	90	22X14
315	L	2	FF 600	600	550	660	8	24	6	24	510	571	1190	1340	1267	140	M20	65	69	18X11
315	L	4-6-8	FF 600	600	550	660	8	24	6	24	510	571	1220	1400	1297	170	M20	85	90	22X14
355	M	2	FF 740	740	680	800	8	24	6	32	625	571	1337	1517	1414	170	M20	80	85	22X14
355	M	4-6-8	FF 740	740	680	800	8	24	6	32	625	571	1377	1597	1454	210	M24	100	106	28X16
355	L	2	FF 740	740	680	800	8	24	6	32	625	571	1467	1647	1544	170	M20	80	85	22X14
355	L	4-6-8	FF 740	740	680	800	8	24	6	32	625	571	1507	1727	1584	210	M24	100	106	28X16
400	L	2	FF 940[3]	940	880	1000	8	28	6	32	700	571	1560	1740	1637	170	M20	80	85	22X14
400	L	4-6-8	FF 940[3]	940	880	1000	8	28	6	32	700	571	1600	1820	1677	210	M24	110	116	28X16
450	L	2	FF1080[3]	1080	1000	1150	8	28	6	32	751	571	1768	1948	1845	170	M24	90	95	25X14
450	L	4-6-8	FF1080[3]	1080	1000	1150	8	28	6	32	751	571	1808	2028	1885	210	M24	120	127	32X18
Tolerances					j6															

Ø D: k6 (132–450); Ø DA: m6 (132–450)

[1] B5 and V3, are up to frame size 315M.
[2] DB, DC : DIN 332-2 Form D
[3] IEC 60 072

All dimensions in mm.

FOOT AND FLANGE MOUNTED (FORM A-B35) - ALUMINIUM HOUSING

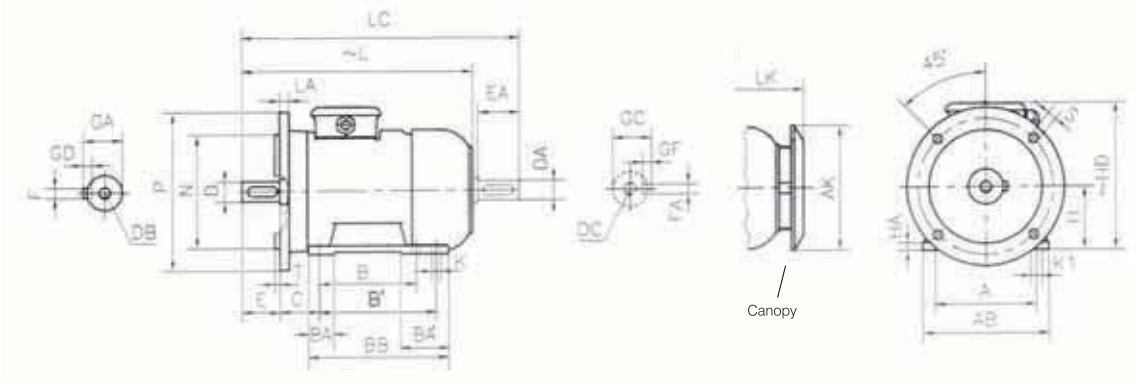

Note: the seating face of the flange lies in the same plane as the shoulder on the shaft

Frame size	Number of pole	H	HD ~	HA	A	AB	ØAK	K	K1	B	B'	BA	BA'	BB	Flange No.	ØM	ØN	ØP	No	ØS	T	LA	L ~	LC	LK ~	C	E EA	DB[1] DC	ØD ØDA	GA GC	FxGD FAxGF
		Dimensions of flanged motors : (D-Flange form A-DIN EN 50 347) mounting arrangements B35																													
56	2-4	56	152	9	90	112	-	5.8	9	71	-	24	-	87	FF100	100	80	120	4	7	3	8	161	185	-	36	20	M4	9	10.2	3X3
63	2-4	63	160	10	100	125	116	7	11	80	-	27	-	103	FF115	115	95	140	4	10	3	10	216	243	245	40	23	M4	11	12.5	4X4
71	2-4-6-8	71	182	10	112	140	116	7	11	90	-	27	-	108	FF130	130	110	160	4	10	3.5	10	249	284	278	45	30	M5	14	16	5X5
80	2-4-6-8	80	198	10	125	160	151	10	15	100	-	33	-	125	FF165	165	130	200	4	12	3.5	12	279	324	308	50	40	M6	19	21.5	6X6
90 S	2-4-6-8	90	216	12	140	180	151	10	15	100	-	35	-	130	FF165	165	130	200	4	12	3.5	12	309	364	338	56	50	M8	24	27	8X7
90 L	2-4-6-8	90	216	12	140	180	151	10	15	125	-	35	-	155	FF165	165	130	200	4	12	3.5	12	334	389	363	56	50	M8	24	27	8X7
90 L	4[3]	90	216	12	140	180	151	10	15	125	-	35	-	155	FF165	165	130	200	4	12	3.5	12	360	415	389	56	50	M8	24	27	8X7
100 L	2-4-6-8	100	234	13	160	200	189	12	18	140	-	39	-	175	FF215	215	180	250	4	14.5	4	15	376	442	413	63	60	M10	28	31	8X7
100 L	4[4]	100	234	13	160	200	189	12	18	140	-	39	-	175	FF215	215	180	250	4	14.5	4	15	406	472	443	63	60	M10	28	31	8X7
112 M	2-4-6-8	112	257	13	190	230	189	12	18	140	-	39	-	175	FF215	215	180	250	4	14.5	4	15	396	462	433	70	60	M10	28	31	8X7
112 M	4[5]	112	257	13	190	230	189	12	18	140	-	39	-	175	FF215	215	180	250	4	14.5	4	15	421	487	458	70	60	M10	28	31	8X7
132 S	2-4-6-8	132	300	15	216	260	239	12	18	140	-	46	-	180	FF265	265	230	300	4	14.5	4	20	460	546	497	89	80	M12	38	41	10X8
132 M	2-4-6-8	132	300	15	216	260	239	12	18	178	-	46	-	218	FF265	265	230	300	4	14.5	4	20	498	584	535	89	80	M12	38	41	10X8
132 M	6[6]	132	300	15	216	260	239	12	18	178	-	46	-	218	FF265	265	230	300	4	14.5	4	20	523	614	560	89	80	M12	38	41	10X8
160 M	2-4-6-8	160	380	22	254	312	303	15	19	210	-	60	104	304	FF300[2]	300	250	350	4	18.5	5	20	600	716	657	108	110	M16	42	45	12X8
160 L	2-4[7]	160	380	22	254	312	303	15	19	-	254	60	104	304	FF300[2]	300	250	350	4	18.5	5	20	644	760	701	108	110	M16	42	45	12X8
180 M	2-4-6-8	180	421	24	279	354	303	15	19	241	-	57	95	320	FF300[2]	300	250	350	4	18.5	5	20	657	773	714	121	110	M16	48	51.5	14X9
180 L	2-4-6-8	180	421	24	279	354	303	15	19	-	279	57	95	320	FF300[2]	300	250	350	4	18.5	5	20	657	773	714	121	110	M16	48	51.5	14X9
200 L	2-4-6-8	200	477	26	318	398	370	19	24	305	-	68	-	355	FF350[2]	350	300	400	4	18,5	5	20	747	865	803	133	110	M20	55	59	16x10
Tolerances		-0.5																											m6		

j6 / k6

All dimensions in mm.

[1] DB, DC : DIN 332-2 Form D
[2] Flanges are cast iron.
[3] IE3 motor type AGM3E 90 L 4
[4] IE2&IE3 motor type AGM2E 100 L 4b, AGM3E 100 L 4b
[5] IE3 motor type AGM3E 112 M 4
[6] IE2&IE3 motor type AGM2E 132 M 6b, AGM3E 132 M 6b
[7] IE2 motor type AGM2E 160 L 2, AGM2E 160 L 4

FOOT AND FLANGE MOUNTED (FORM A-B35) - CAST IRON HOUSING

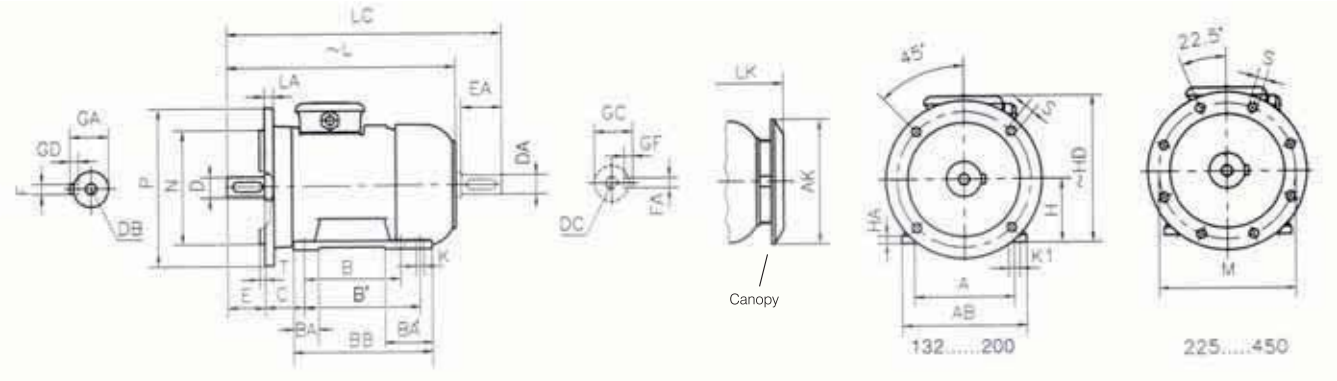

Note: The seating face of the flange lies in the same plane as the shoulder on the shaft

Frame size		Number of pole	Dimensions of foot and flange mounted motors : (D-Flange form A-DIN EN 50 347) mounting arrangements B35																												
			H	HD ~	HA	A	AB	ØAK	K	B	B'	BA	BA'	BB	Flange No.	ØM	ØN	ØP	No	ØS	T	LA	L ~	LC	LK ~	C	E EA	DB[1] DC	Ø D Ø DA	GA GC	FxGD FAxGF
132	S	2-4-6-8	132	300	15	216	260	239	12	140	-	46	84	218	FF265	265	230	300	4	14,5	4	20	498	584	535	89	80	M12	38	41	10X8
	M									-	178																				
160	M	2-4-6-8	160	380	22	254	312	303	15	210	-	62	-	260	FF300	300	250	350	4	18.5	5	20	600	716	657	108	110	M16	42	45	12X8
	L									254	-			304									644	760	701						
180	M	2-4-6-8	180	421	24	279	354	303	15	241	279	57	85	319	FF300	300	250	350	4	18.5	5	20	657	773	714	121	110	M16	48	51.5	14X9
	L									279	-	62	-	329									695	811	752						
200	L	2-4-6-8	200	477	26	318	398	370	19	305	-	68	-	355	FF350	350	300	400	4	18.5	5	20	747	865	803	133	110	M20	55	59	16X10
225	S	4-8	225	510	30	356	438	370	19	286	311	76	92,5	363	FF400	400	350	450	8	18.5	5	20	795	943	851	149	140	M20	60	64	18X11
	M	2								311	-		-	371									790	908	846		110		55	59	16X10
		4-6-8																					820	968	876		140		60	64	18X11
250	M	2	250	572	35	406	484	440	24	349	-	75	-	410	FF500	500	450	550	8	18.5	5	24	896	1044	952	168	140	M20	60	64	18X11
		4-6-8																											65	69	
280	S	2	280	630	40	457	550	440	24	368	-	85	128	474	FF500	500	450	550	8	18.5	5	24	958	1106	1014	190	140	M20	65	69	18X11
		4-6-8																											75	79,5	20X12
	M	2								-	419																		65	69	18X11
		4-6-8																											75	79,5	20X12
315	S	2	315	825	50	508	620	571	28	406	-	115	166	550	FF600	600	550	660	8	24	6	24	1120	1270	1197	216	140	M20	65	69	18X11
		4-6-8																					1150	1330	1227		170		85	90	22X14
	M	2								-	457												1120	1270	1197		140		65	69	18X11
		4-6-8																					1150	1330	1227		170		85	90	22X14
	L	2								508	-	125	-	600									1190	1340	1267		140		65	69	18X11
		4-6-8																					1220	1400	1297		170		85	90	22X14
355	M	2	355	980	50	610	740	571	28	560	-	140	-	680	FF740	740	680	800	8	24	6	32	1337	1517	1414	254	170	M20	80	85	22X14
		4-6-8																					1377	1597	1454		210	M24	100	106	28X16
	L	2								630	-			750									1467	1647	1544		170	M20	80	85	22X14
		4-6-8																					1507	1727	1584		210	M24	100	106	28X16
400	L	2	400	1100	50	686	850	571	35	710	-	170	-	844	FF940[2]	940	880	1000	8	28	6	32	1560	1740	1637	280	170	M20	80	85	22X14
		4-6-8																					1600	1820	1677		210	M24	110	116	28X16
450	L	2	450	1201	62	800	975	571	45	900	-	200	-	1050	FF1080[2]	1080	1000	1150	8	28	6	32	1768	1948	1845	280	170	M24	90	95	25X14
		4-6-8																					1808	2028	1885		210		120	127	32X18
Tolerances			±0.5	±1																									k6 / m6		

[1] DB, DC : DIN 332-2 Form D
[2] IEC 60 072

All dimensions in mm.

FLANGE MOUNTED (FORM C-B14) - ALUMINIUM HOUSING

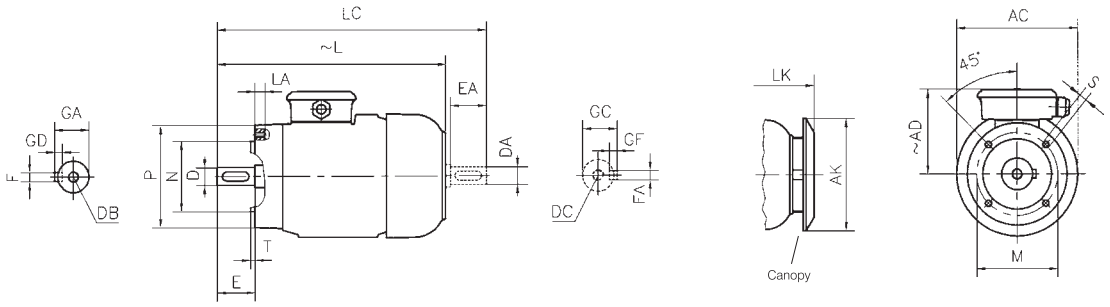

Note: The seating face of the flange lies in the same plane as the shoulder on the shaft

Frame size		Number of pole	Dimensions of flanged motors : (C-Face Flange form C - DIN EN 50 347) mounting arrangements B14, V18, V19																		
			Flange Number	ØM	ØN	ØP	S	T	LA[4]	Ø AC	Ø AK	AD ~	L ~	LC	LK ~	E EA	DB[1] DC	Ø D Ø DA	GA GC	FxGD FAxGF
56		2-4	FT 65	65	50	80	M5	2.5	10	105	-	96	161	185	-	20	M4	9	10.2	3x3
			FT 85	85	70	105	M6		12											
63		2-4	FT 75	75	60	90	M5	2.5	10	121	116	98	216	243	245	23	M4	11	12.5	4x4
			FT 100	100	80	120	M6	3	12											
71		2-4-6-8	FT 85	85	70	105	M6	2.5	12	138	116	110	249	284	278	30	M5	14	16	5x5
			FT 115	115	95	140	M8	3	16	-										
80		2-4-6-8	FT 100	100	80	120	M6	3	12	156	151	118	279	324	308	40	M6	19	21.5	6x6
			FT 130	130	110	160	M8	3.5	16	-										
90	S	2-4-6-8	FT 115	115	95	140	M8	3	16	176	151	126	309	364	338	50	M8	24	27	8x7
			FT 130	130	110	160		3.5												
	L	2-4-6-8	FT 115	115	95	140		3					334	389	363					
		4[3]											360	415	389					
		2-4-6-8	FT 130	130	110	160		3.5					334	389	363					
		4[3]											360	415	389					
100	L	2-4-6-8	FT 130	130	110	160	M8	3.5	16	194	189	135	376	442	413	60	M10	28	31	8x7
		4[4]											406	472	443					
		2-4-6-8	FT 165	165	130	200	M10		20	-			376	442	413					
		4[4]											406	472	443					
112	M	2-4-6-8	FT 130	130	110	160	M8	3.5	16	218	189	146	396	462	433	60	M10	28	31	8x7
		4[5]											425	487	462					
		2-4-6-8	FT 165[2]	165	130	200	M10		20				396	462	433					
		4[5]											425	487	462					
132	S	2-4-6-8	FT 165	165	130	200	M10	3.5	16	257	239	168	460	546	497	80	M12	38	41	10x8
			FT 215[2]	215	180	250	M12	4	18											
	M	2-4-6-8	FT 165	165	130	200	M10	3.5	16				498	584	535					
		6[6]	FT 215[2]	215	180	250	M12	4	18				523	614	560					
		2-4-6-8	FT 165	165	130	200	M10	3.5	16				498	584	535					
		6[6]	FT 215[2]	215	180	250	M12	4	18				523	614	560					
160	M	2-4-6-8	FT 215[2]	215	180	250	M12	4	21	310	303	225	600	716	657	110	M16	42	45	12x8
	L	2-4-6-8																		
		2-4[7]											644	760	701					
Tolerances					j6															

j6

[1] DB, DC : DIN 332-2 Form D
[2] Flanges are cast iron.
[3] IE3 motor type AGM3E 90 L 4
[4] IE2&IE3 motor type AGM2E 100 L 4b, AGM3E 100 L 4b
[5] IE3 motor type AGM3E 112 M 4
[6] IE2&IE3 motor type AGM2E 132 M 6b, AGM3E 132 M 6b
[7] IE2 motor type AGM2E 160 L 2, AGM2E 160 L 4

All dimensions in mm.

FLANGE MOUNTED (FORM C-B14) - CAST IRON HOUSING

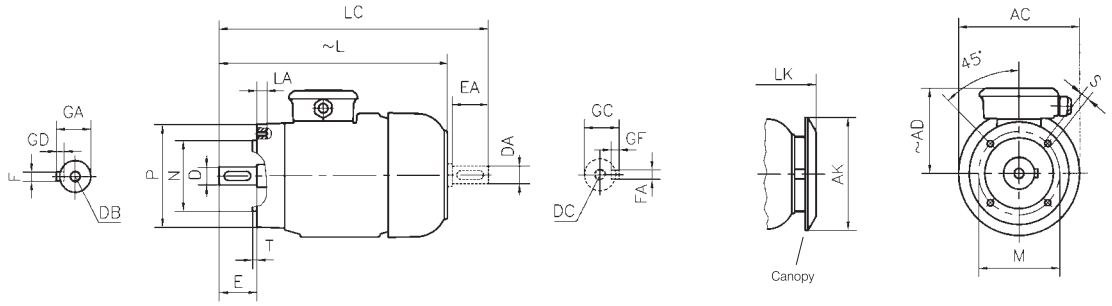

Note: The seating face of the flange lies in the same plane as the shoulder on the shaft

Frame size		Number of pole	Dimensions of flanged motors : (C-Face Flange form C - DIN EN 50 347)c mounting arrangements B14, V18, V19																	
			Flange Number	MØ	NØ	PØ	S	T	LA[4]	AC Ø	AK Ø	AD ~	L ~	LC	LK ~	E EA	DB[1] DC	D Ø DA Ø	GA GC	FxGD FAxGF
132	S	2-4-6-8	FT 165	165	130	200	M10	3,5	18	257	239	168	498	584	535	80	M12	38	41	10x8
			FT 215	215	180	250	M12	4												
	M		FT 165	165	130	200	M10	3,5												
			FT 215	215	180	250	M12	4												
160	M	2-4-6-8	FT 215	215	180	250	M12	4	21	310	303	225	600	716	657	110	M16	42	45	12x8
	L												644	760	701					
Tolerances					j6													k6		

[1] DB, DC : DIN 332-2 Form D

All dimensions in mm.

FOOT AND FLANGE MOUNTED (FORM C-B34) - ALUMINIUM HOUSING

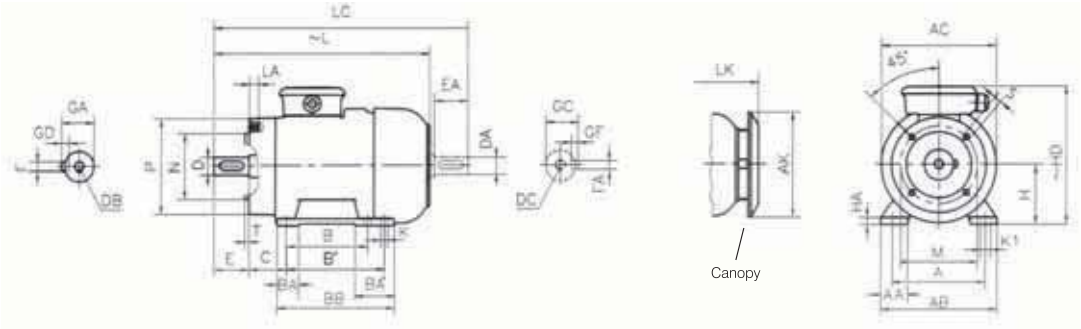

Note: The seating face of the flange lies in the same plane as the shoulder on the shaft

Frame size		Number of pole	Dimensions of foot and flange mounted motors : (C-Face Flange form C - DIN EN 50 347) mounting arrangements B34																													
			H	HD ~	HA	A	AA	AB	ØAC	ØAK	K	K1	B	B'	BA	BA'	BB	Flange Number	ØM	ØN	ØP	S	T	LA[3]	L ~	LC	LK ~	C	E EA	DB[1] DC	Ø D Ø DA	GA GC	FxGD FAxGF
56		2-4	56	152	9	90	28	112	105	-	5.8	9	71	-	24	-	87	FT 65	65	50	80	M5	2,5	10	161	185	-	36	20	M4	9	10,2	3x3
																		FT 85	85	70	105	M6		12									
63		2-4	63	161	10	100	31	125	121	116	7	11	80	-	27	-	103	FT 75	75	60	90	M5	2,5	10	216	243	245	40	23	M4	11	12,5	4x4
																		FT 100	100	80	120	M6	3	12									
71		2-4-6-8	71	181	10	112	33	140	138	116	7	11	90	-	27	-	108	FT 85	85	70	105	M6	2,5	12	249	284	278	45	30	M5	14	16	5x5
									-									FT115	115	95	140	M8	3	16									
80		2-4-6-8	80	198	10	125	38	160	156	151	10	15	100	-	33	-	125	FT 100	100	80	120	M6	3	12	279	324	308	50	40	M6	19	21,5	6x6
									-									FT 130	130	110	160	M8	3,5	16									
90	S	2-4-6-8	90	216	12	140	43	180	176	151	10	15	100	-	35	-	130	FT 115	115	95	140	M8	3	16	309	364	338	56	50	M8	24	27	8x7
																		FT130	130	110	160		3,5										
	L	2-4-6-8											125	-			155	FT 115	115	95	140		3		334	389	363						
		4[4]																							360	415	389						
		2-4-6-8																FT 130	130	110	160		3,5		334	389	363						
		4[4]																							360	415	389						
100	L	2-4-6-8	100	234	13	160	47	200	194	189	12	18	140	-	39	-	175	FT 130	130	110	160	M8	3,5	16	376	442	413	63	60	M10	28	31	8x7
		4[5]																							406	472	443						
		2-4-6-8							-									FT 165	165	130	200	M10		20	376	442	413						
		4[5]																							406	472	443						
112	M	2-4-6-8	112	257	13	190	47	230	218	189	12	18	140	-	39	-	175	FT 130	130	110	160	M8	3,5	16	396	462	433	70	60	M10	28	31	8x7
		4[6]																							425	487	462						
		2-4-6-8																FT 165[2]	165	130	200	M10		15	396	462	433						
		4[6]																							425	487	462						
132	S	2-4-6-8	132	300	15	216	49	260	257	239	12	18	140	-	46	-	180	FT 165	165	130	200	M10	3,5	16	460	546	497	89	80	M12	38	41	10x8
																		FT 215[2]	215	180	250	M12	4	18									
	M	2-4-6-8											178	-			218	FT 165	165	130	200	M10	3,5	16	498	584	535						
		6[7]																							523	614	560						
		2-4-6-8																FT 215[2]	215	180	250	M12	4	18	498	584	535						
		6[7]																							523	614	560						
160	M	2-4-6-8	160	380	22	254	60	312	310	303	15	19	210	-	62	104	304	FT 215[2]	215	180	250	M12	4	21	600	716	657	108	110	M16	42	45	12x8
	L	2-4-6-8											-	254																			
		2-4[8]																							644	760	701						
Tolerances			-0.5																	j6													

[1] DB, DC : DIN 332-2 Form D
[2] Flanges are cast iron.
[3] Length of tapped hole
[4] IE2 motor type AGM3E 90 L 4
[5] IE2&IE3 motor type AGM2E 100 L 4b, AGM3E 100 L 4b
[6] IE3 motor type AGM3E 112 M 4
[7] IE2&IE3 motor type AGM2E 132 M 6b, AGM3E 132 M 6b
[8] IE2 motor type AGM2E 160 L 2, AGM2E 160 L 4

All dimensions in mm.

FOOT AND FLANGE MOUNTED (FORM C-B34) - CAST IRON HOUSING

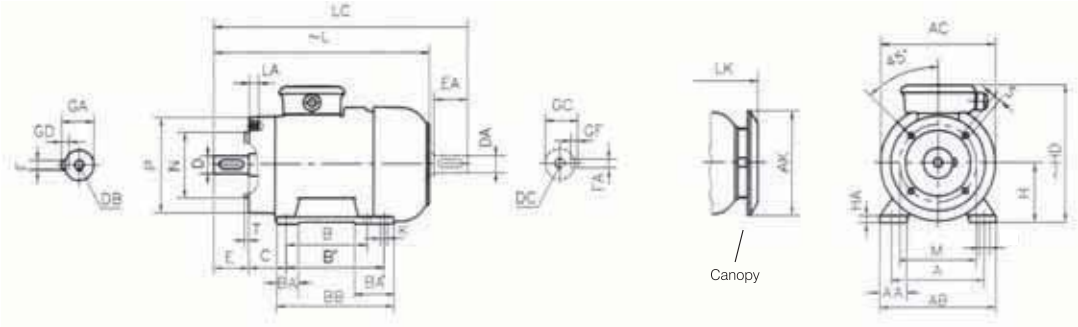

Note: The seating face of the flange lies in the same plane as the shoulder on the shaft

Frame size	Number of pole	Dimensions of foot and flange mounted motors : (C-Face Flange form C - DIN EN 50 347) mounting arrangements B34																												
		H	HD ~	HA	A	AA	AB	ACØ	AKØ	K Ø	B	B'	BA	BA'	BB	Flange Number	MØ	NØ	PØ	S	T	LA[1]	L ~	LC	LK ~	C	E EA	DB[2] DC	DØ DAØ	GA GC	FxGD FAxGF
132 S	2-4-6-8	132	300	15	216	52	260	257	239	12	140	-	46	84	218	FT165	165	130	200	M10	3,5	16	498	584	535	89	80	M12	38	41	10x8
																FT215	215	180	250	M12	4	18								
132 M											-	178				FT165	165	130	200	M10	3,5	16								
																FT215	215	180	250	M12	4	18								
160 M	2-4-6-8	160	380	22	254	60	312	310	303	15	210	-	62	-	260	FT215	215	180	250	M12	4	21	600	716	657	108	110	M16	42	45	12x8
160 L											254				304								644	760	701						
Tolerances		-0.5																j6												

[1] Length of tapped hole
[2] DB, DC : DIN 332-2 Form D

All dimensions in mm.

SPARES

The spare-parts are fully interchangeable as they are designed and manufactured to fine limits of their dimensional tolerances. Please state motor type, serial number, type of construction-mounting arrangement and part number with full description when ordering spare parts.

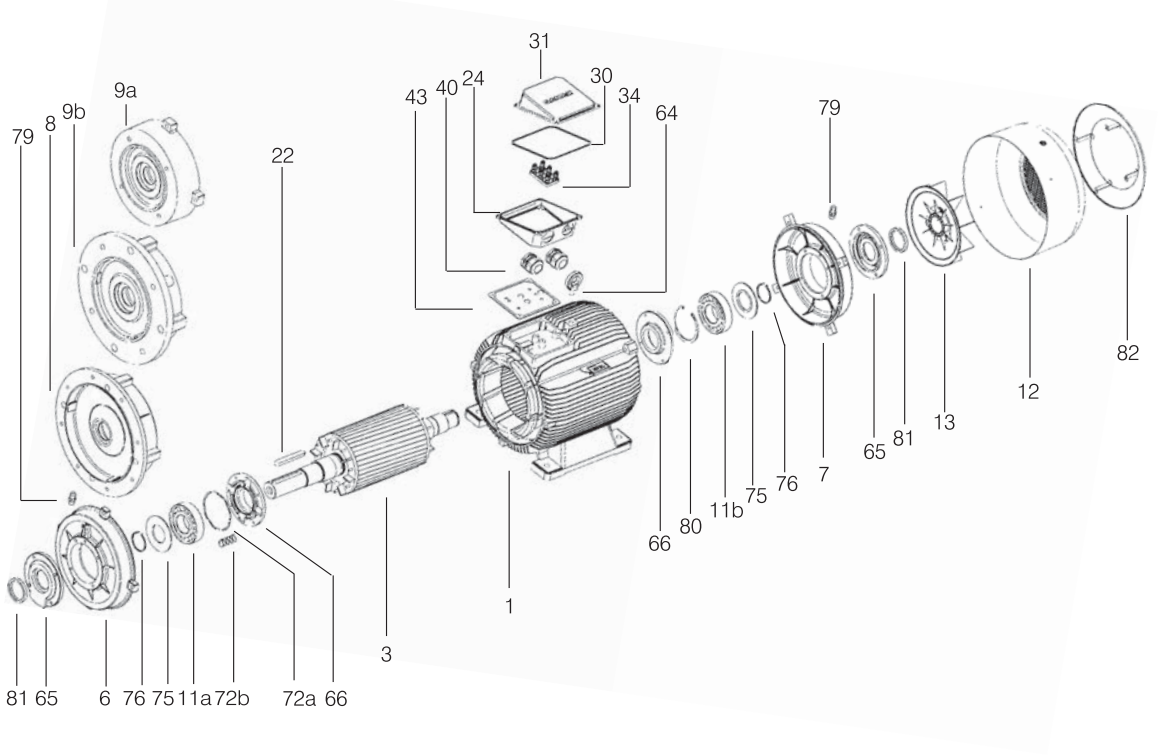

Part No.	Description
1	Stator complete with winding, varnished and fitted in the frame
3	Rotor complete with shaft, finish machined and balanced (Excluding keys)
6	End shield Drive-end B3 mounting
7	End shield Non Drive-end
8	D-Flange (Form A, “FF”)
9a	C-Face Flange (Form C, “FT” / Small)
9b	C-Face Flange (Form C, “F” / Large)
11 a	Bearing Drive-end (Ball or Roller)
11 b	Ball-bearing Non Drive-end
12	Fan cover (63 to 450)
13	Fan (63 to 450)
22	Shaft key
24	Terminal-box
30	Terminal-box to lid gasket
31	Terminal-box lid
34	Terminal board complete with terminal links, nuts and washers
40	Cable-gland
43	Terminal-box to frame gasket
64	Eye bolt (200 to 450)
65	External bearing cap (motors with greasing nipples)
66	Internal bearing cap (motors with greasing nipples)
72a	Corrugated disc spring for preloading ball-bearing (56 to 280)
72b	Helical compression spring (315 to 450)
75	Grease retaining disc (motors with greasing nipples)
76	External circlip for retaining ball-bearing and grease retaining disc on the shaft (At DE, N.DE of motors with greasing nipples, and at N.DE of frames 160 to 280)
79	Greasing nipple (315 to 450 standard, 132 to 280 optional)
80	Internal circlip for retaining ball-bearing at Non Drive-end shield (160 to 280)
81	V-Ring (Oil-Seal)
82	Canopy

MODULAR ELIT SERIES MOTORS

	Page
RATINGS AND PERFORMANCE	56...59
DIMENSIONS	60...64
SPARES	65

NEW MODULAR ELIT SERIES

C A G M M 3EL 160 M 2 a

2EL : Elit Series IE2 High Efficiency motors

3EL : Elit Series IE3 Premium Efficiency motors

New design modular Elit Series offer a high performance with unique and flexible options for variable application areas. Different than standard series, Elit series motors have removable feet design for 132-200 frame size. The feet mounting system offers great flexibility and it is very simple allowing change on the mounting configuration without requiring any machining or modification on the motor feet. In addition to this only for 132 aluminium frame motor detachable flange and plastic fan cover will be available.

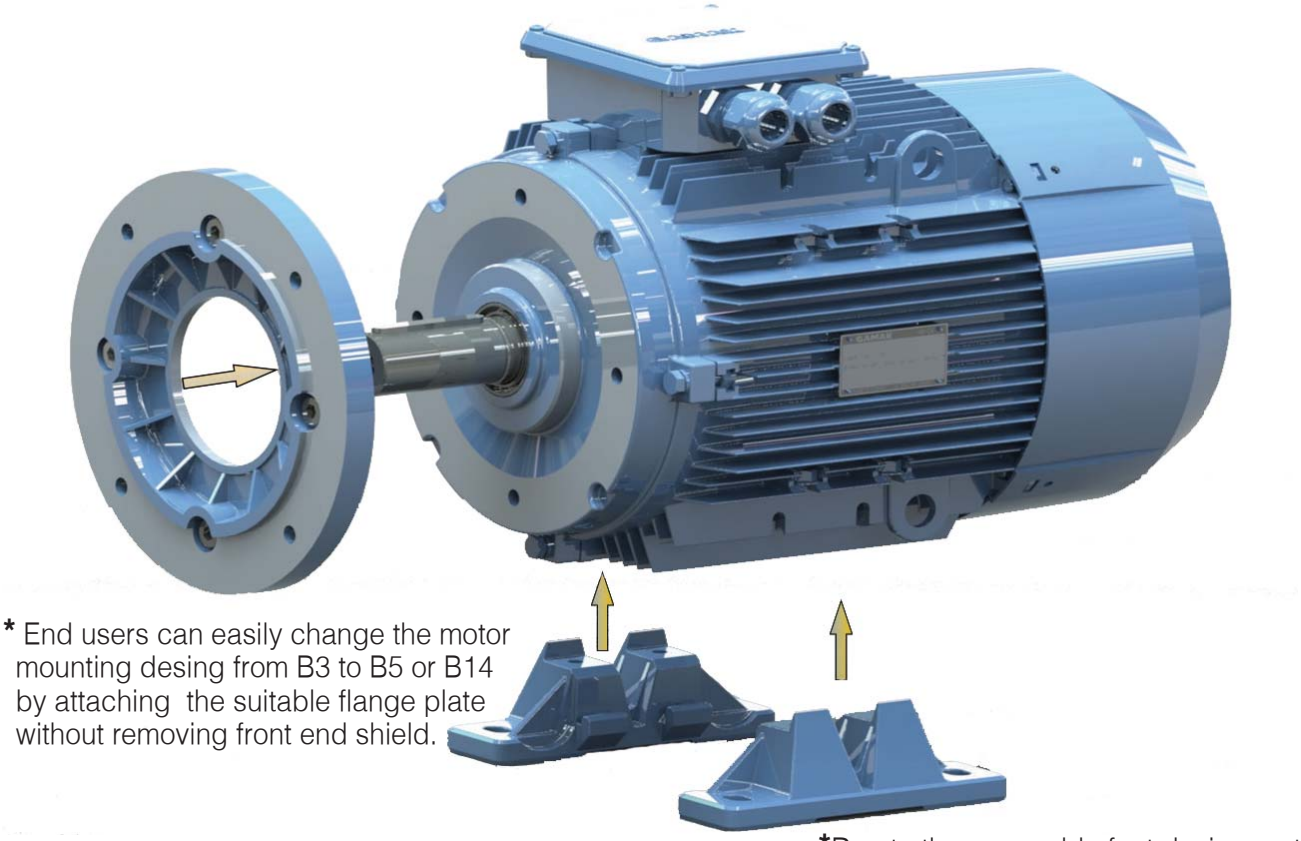

* End users can easily change the motor mounting desing from B3 to B5 or B14 by attaching the suitable flange plate without removing front end shield.

*Due to the removable feet design motor terminal box can also be rotated at 90 degrees allowing motor leads to be connected on 3 side of the motor.

Frames, end-shields and flanges

The following table shows the materials of motor frames, endshields and flanges :

Frame Size	Frame	End Shields	Flanges			Removable Feet		Attachable Flange	
			B5	B14/Small	B14/Large	Al. Housing	Cast Iron Housing	Al. Housing	Cast Iron Housing
132	Aluminium or Cast Iron	Aluminium or Cast Iron	Aluminium or Cast Iron	Aluminium	Cast Iron	√	-	√	-
160				Cast Iron				-	
180				-	-				
200				-	-				

In aluminium Elit Series removable feet are cast separately from motor frames but in cast iron elit series feet are cast integrally with frames. Detachable flanges are only available for 132 frame size.

ELIT SERIES - RATINGS AND PERFORMANCE

PREMIUM EFFICIENCY MOTORS

IE3

3-phase, 400 V, 50 Hz
Duty type : S1 (continuous)
Degree of protection : IP 55
Insulation class : F (155°C)
Temp. Rise : Class B (80K)

ALUMINIUM HOUSING

Rated output	Type	Full-load data							Starting data				Breakdown torque ratio	Moment of inertia	Weight approx.
		Speed n	Current I_N	Torque M_N	Power Factor Cos φ	Efficiency η % IEC 60034-2-1:2007			Locked-rotor current ratio I_A/I_N		Locked-rotor torque ratio M_A/M_N		M_K/M_N	J	B3
kW		min^{-1}	A	Nm		At 4/4	At 3/4	At 1/2	D.O.L.	Y/Δ	D.O.L.	Y/Δ		kgm^2	kg
2 pole, 3000 min^{-1}															
5.5	AGM3EL 132 S 2	2925	9,7	17.9	0.89	89.2	89.0	87.4	7.2	2.4	2.1	0.7	2.8	0.0150	41
7.5	AGM3EL 132 M 2	2930	12.9	24.5	0.93	90.1	90.1	89.5	7.8	2.6	2.0	0.7	2.9	0.0210	66
11.00	AGM3EL 160 M 2a	2955	19.0	35.7	0.91	91.2	91.2	90.4	6.6	2.2	1.8	0.6	2.6	0.0310	90
15.00	AGM3EL 160 M 2b	2955	25.7	48.6	0.92	91.9	91.8	91.6	7.9	2.6	2.2	0.7	2.9	0.0410	105
18.50	AGM3EL 160 L 2	2960	31.4	59.9	0.92	92.4	92.5	92.0	8.1	2.7	2.2	0.7	3.1	0.0490	122
22.00	AGM3EL 180 M 2	2960	36.9	71.1	0.93	92.7	92.6	92.2	8.9	3.0	2.9	1.0	3.4	0.0910	157
30	AGM3EL 200 L 2a	2980	52	96	0.89	93.3	93.3	92.8	8.5	2.7	2.8	0.9	3.5	0.15	142
37	AGM3EL 200 L 2b	2980	63	119	0.90	93.7	93.7	93.1	8.3	2.7	2.8	0.9	3.1	0.17	172
4 pole, 1500 min^{-1}															
5.5	AGM3EL 132 S 4	1470	11	35.7	0.81	89.6	89.6	88.8	7.0	2.3	2.7	0.9	3.3	0.026	36
7.5	AGM3EL 132 M 4	1470	15	48.7	0.78	90.4	90.5	89.6	7.5	2.5	3.0	1.0	3.6	0.032	41
11.00	AGM3EL 160 M 4	1470	21.1	71.5	0.82	91.4	91.3	91.0	6.1	2.0	1.9	0.6	2.6	0.0760	92
15.00	AGM3EL 160 L 4	1475	28.5	97.2	0.82	92.1	92.0	91.8	6.7	2.2	2.0	0.7	2.9	0.1020	128
18.50	AGM3EL 180 M 4	1475	33.7	119.8	0.85	92.6	92.6	91.6	7.9	2.6	2.5	0.8	2.8	0.1770	160
22.00	AGM3EL 180 L 4	1475	39.4	142.6	0.87	93.0	92.8	92.0	7.5	2.5	2.4	0.8	2.8	0.1920	176
30.00	AGM3EL 200 L 4	1475	52.8	194.1	0.88	93.6	93.5	93.3	8.2	2.7	2.4	0.8	3.0	0.2640	225
6 pole, 1000 min^{-1}															
3.00	AGM3EL 132 S 6	970	7.3	29.5	0.69	85.8	85.6	85.2	5.4	1.8	2.1	0.7	2.9	0.0230	39
4.00	AGM3EL 132 M 6a	975	10.2	39.4	0.65	86.8	86.7	86.4	5.6	1.9	2.5	0.8	3.1	0.0280	47
5.50	AGM3EL 132 M 6b	975	13.7	54.1	0.66	88.0	87.8	87.5	5.9	2.0	2.6	0.9	3.3	0.0360	55
7.50	AGM3EL 160 M 6	970	16.2	73.5	0.75	89.1	89.0	88.1	6.7	2.2	2.6	0.9	3.4	0.0910	96
11.00	AGM3EL 160 L 6	975	22.7	107.9	0.78	90.3	90.3	89.0	7.1	2.4	2.5	0.8	3.4	0.1300	122
15.00	AGM3EL 180 L 6	975	28.7	146.8	0.83	91.2	91.2	90.8	8.0	2.7	2.4	0.8	3.2	0.2160	162
18.50	AGM3EL 200 L 6a	980	36.8	180.7	0.79	91.7	91.6	91.3	7.9	2.6	2.5	0.8	3.3	0.2890	188
22.00	AGM3EL 200 L 6b	980	42.2	214.9	0.82	92.2	92.0	91.7	7.4	2.5	2.9	1.0	2.9	0.3440	215

Efficiencies are calculated according to indirect method where the additional load losses are determined from exact measurements at different load points.
(IEC 60034-2-1 : 2014)

ELIT SERIES - RATINGS AND PERFORMANCE

PREMIUM EFFICIENCY MOTORS

IE3

3-phase, 400 V, 50 Hz
Duty type : S1 (continuous)
Degree of protection : IP 55
Insulation class : F (155°C)
Temp. Rise : Class B (80K)

ALUMINIUM HOUSING

Rated output	Type	Full-load data							Starting data				Breakdown torque ratio	Moment of inertia	Weight approx.
		Speed n	Current I_N	Torque M_N	Power Factor Cos φ	Efficiency η % IEC 60034-2-1:2007			Locked-rotor current ratio I_A/I_N		Locked-rotor torque ratio M_A/M_N		M_K/M_N	J	B3
kW		min^{-1}	A	Nm		At 4/4	At 3/4	At 1/2	D.O.L.	Y/Δ	D.O.L.	Y/Δ		kgm^2	kg
2 pole, 3000 min^{-1}															
5.5	GM3EL 132 S 2	2925	9.7	17.9	0.89	89.2	89.0	87.4	7.2	2.4	2.1	0.7	2.8	0.0150	66.5
7.5	GM3EL 132 M 2	2930	12.9	24.5	0.93	90.1	90.1	89.5	7.8	2.6	2.0	0.7	2.9	0.0210	80.4
11.00	GM3EL 160 M 2a	2955	19.0	35.7	0.91	91.2	91.2	90.4	6.6	2.2	1.8	0.6	2.6	0.0310	113
15.00	GM3EL 160 M 2b	2955	25.7	48.6	0.92	91.9	91.8	91.6	7.9	2.6	2.2	0.7	2.9	0.0410	128
18.50	GM3EL 160 L 2	2960	31.4	59.9	0.92	92.4	92.5	92.0	8.1	2.7	2.2	0.7	3.1	0.0490	145
22.00	GM3EL 180 M 2	2960	36.9	71.1	0.93	92.7	92.6	92.2	8.9	3.0	2.9	1.0	3.4	0.0910	193
30	GM3EL 200 L 2a	2980	52	96	0.89	93.3	93.3	92.8	8.5	2.7	2.8	0.9	3.5	0.15	190
37	GM3EL 200 L 2b	2980	63	119	0.90	93.7	93.7	93.1	8.3	2.7	2.8	0.9	3.1	0.17	220
4 pole, 1500 min^{-1}															
5.5	GM3EL 132 S 4	1470	11	35.7	0.81	89.6	89.6	88.8	7.0	2.3	2.7	0.9	3.3	0.026	48
7.5	GM3EL 132 M 4	1470	15.4	48.7	0.78	90.4	90.5	89.6	7.5	2.5	3.0	1.0	3.6	0.032	56
11.00	GM3EL 160 M 4	1470	21.1	71.5	0.82	91.4	91.3	91.0	6.1	2.0	1.9	0.6	2.6	0.0760	124
15.00	GM3EL 160 L 4	1475	28.5	97.2	0.82	92.1	92.0	91.8	6.7	2.2	2.0	0.7	2.9	0.1020	151
18.50	GM3EL 180 M 4	1475	33.7	119.8	0.85	92.6	92.6	91.6	7.9	2.6	2.5	0.8	2.8	0.1770	194
22.00	GM3EL 180 L 4	1475	39.4	142.6	0.87	93.0	92.8	92.0	7.5	2.5	2.4	0.8	2.8	0.1920	215
30.00	GM3EL 200 L 4	1475	52.8	194.1	0.88	93.6	93.5	93.3	8.2	2.7	2.4	0.8	3.0	0.2640	273
6 pole, 1000 min^{-1}															
3.00	GM3EL 132 S 6	970	7.3	29.5	0.69	85.8	85.6	85.2	5.4	1.8	2.1	0.7	2.9	0.0230	53
4.00	GM3EL132 M 6a	975	10.2	39.4	0.65	86.8	86.7	86.4	5.6	1.9	2.5	0.8	3.1	0.0280	62
5.50	GM3EL 132 M 6b	975	13.7	54.1	0.66	88.0	87.8	87.5	5.9	2.0	2.6	0.9	3.3	0.0360	71
7.50	GM3EL 160 M 6	970	16.2	73.5	0.75	89.1	89.0	88.1	6.7	2.2	2.6	0.9	3.4	0.0910	119
11.00	GM3EL 160 L 6	975	22.7	107.9	0.78	90.3	90.3	89.0	7.1	2.4	2.5	0.8	3.4	0.1300	145
15.00	GM3EL 180 L 6	975	28.7	146.8	0.83	91.2	91.2	90.8	8.0	2.7	2.4	0.8	3.2	0.2160	201
18.50	GM3EL 200 L 6a	980	36.8	180.7	0.79	91.7	91.6	91.3	7.9	2.6	2.5	0.8	3.3	0.2890	236
22.00	GM3EL 200 L 6b	980	42.2	214.9	0.82	92.2	92.0	91.7	7.4	2.5	2.9	1.0	2.9	0.3440	262

Efficiencies are calculated according to indirect method where the additional load losses are determined from exact measurements at different load points. (IEC 60034-2-1 : 2014)

ELIT SERIES - RATINGS AND PERFORMANCE

IE2

3-phase, 400 V, 50 Hz
Duty type : S1 (continuous)
Degree of protection : IP 55
Insulation class : F (155°C)
Temp. Rise : Class B (80K)

ALUMINIUM HOUSING

Rated output	Type	Full-load data							Starting data				Breakdown torque ratio	Moment of inertia	Weight approx.
		Speed n	Current I_N	Torque M_N	Power Factor Cos φ	Efficiency η % IEC 60034-2-1:2007			Locked-rotor current ratio I_A/I_N		Locked-rotor torque ratio M_A/M_N		M_K/M_N	J	B3
kW		min^{-1}	A	Nm		At 4/4	At 3/4	At 1/2	D.O.L.	Y/Δ	D.O.L.	Y/Δ		kgm^2	kg
2 pole, 3000 min^{-1}															
5.5	AGM2EL 132 S 2	2905	9.8	18.1	0.92	87.3	87.3	86.5	6.2	2.1	1.9	0.6	2.5	0.0130	31
7.5	AGM2EL 132 M 2	2910	13.6	24.6	0.90	88.5	88.5	87.9	7.2	2.3	3.0	1.0	3.4	0.014	50
11.00	AGM2EL 160 M 2a	2945	19.3	35.9	0.92	89.5	89.5	88.6	6.0	2.0	1.7	0.6	2.4	0.0270	82
15.00	AGM2EL 160 M 2b	2945	26.1	48.6	0.92	90.4	90.4	89.7	7.2	2.4	2.1	0.7	2.8	0.0350	93.8
18.50	AGM2EL 160 L 2	2950	32.3	59.9	0.91	90.9	90.8	90.1	7.7	2.6	2.5	0.8	3.0	0.043	110.3
22.00	C.AGM2EL 160 L 2	2950	37.4	71.4	0.92	91.3	91.3	90.8	7.1	2.4	2.3	0.8	2.6	0.05	120
22.00	AGM2EL 180 M 2	2950	38.3	71.2	0.91	91.3	91.3	90.8	8.2	2.6	3.0	1.0	3.5	0.066	122
30	AGM2EL 200 L 2a	2970	52	96	0.91	92.0	92.0	91.2	8.3	2.7	2.7	0.9	3.0	0.13	161.3
37	AGM2EL 200 L 2b	2970	65	119	0.89	92.6	92.6	91.7	8.3	2.7	2.7	0.9	3.0	0.15	191.3
4 pole, 1500 min^{-1}															
5.5	AGM2EL 132 S 4	1465	11.2	35.9	0.81	87.9	88.0	87.2	7.0	2.3	2.8	0.9	3.5	0.021	40
7.5	AGM2EL 132 M 4	1465	15.4	48.9	0.79	89.0	89.1	88.1	7.1	2.3	2.7	0.9	3.4	0.026	46.5
11.00	AGM2EL 160 M 4	1465	21.6	71.5	0.82	90.0	90.1	89.3	6.8	2.3	2.4	0.8	3.0	0.0610	90
15.00	AGM2EL 160 L 4	1470	29.4	96.7	0.81	90.6	90.7	89.7	7.4	2.5	2.8	0.9	3.2	0.0820	108
18.50	AGM2EL 180 M 4	1470	34.5	120	0.85	91.3	91.4	90.4	7.7	2.5	3.2	1.0	3.4	0.13	129
22.00	AGM2EL 180 L 4	1470	42.5	143	0.82	91.7	91.7	90.6	8.3	2.7	2.7	1.2	3.8	0.15	140
30.00	AGM2EL 200 L 4	1470	53.5	194.6	0.87	92.5	92.6	92.1	7.8	2.6	2.8	0.9	2.8	0.2270	215
6 pole, 1000 min^{-1}															
3.00	AGM2EL 132 S 6	960	7.1	30.3	0.73	83.3	83.2	80.4	4.2	1.4	1.6	0.5	2.2	0.0190	35
4.00	AGM2EL132 M 6a	960	9.3	40.2		84.6	84.5	81.6	4.7	1.6	2.0	0.7	2.5	0.024	44
5.50	AGM2EL 132 M 6b	960	12.7	54.7	0.72	86.0	86.0	83.1	4.9	1.6	2.2	0.7	2.6	0.032	54.8
7.50	AGM2EL 160 M 6	975	17.9	73.9	0.69	87.2	87.2	84.5	6.3	2.1	2.6	0.9	3.5	0.0760	82
11.00	AGM2EL 160 L 6	970	22.5	108.7	0.80	88.7	88.7	85.7	6.2	2.1	3.0	1.0	3.0	0.109	108
15.00	AGM2EL 180 L 6	965	29	148	0.83	89.7	89.7	86.8	6.5	2.1	2.4	0.8	3.0	0.2	147
18.50	AGM2EL 200 L 6a	980	37.7	180.5	0.78	90.4	90.4	87.7	7.2	2.4	2.3	0.8	3.2	0.2340	167
22.00	AGM2EL 200 L 6b	980	43.4	215.4	0.80	91.1	91.1	88.4	6.7	2.2	2.3	0.8	2.8	0.2830	187

Efficiencies are calculated according to indirect method where the additional load losses are determined from exact measurements at different load points. (IEC 60034-2-1 : 2014)

ELIT SERIES - RATINGS AND PERFORMANCE

IE2

3-phase, 400 V, 50 Hz
Duty type : S1 (continuous)
Degree of protection : IP 55
Insulation class : F (155°C)
Temp. Rise : Class B (80K)

ALUMINIUM HOUSING

Rated output	Type	Full-load data							Starting data				Breakdown torque ratio	Moment of inertia	Weight approx.
		Speed	Current	Torque	Power Factor	Efficiency η %			Locked-rotor current ratio		Locked-rotor torque ratio				
		n	I_N	M_N	Cos φ	IEC 60034-2-1:2007			I_A/I_N		M_A/M_N		M_K/M_N	J	B3
kW		min^{-1}	A	Nm		At 4/4	At 3/4	At 1/2	D.O.L.	Y/Δ	D.O.L.	Y/Δ		kgm^2	kg

2 pole, 3000 min^{-1}

5.5	GM2EL 132 S 2	2905	9.8	18.1	0.92	87.3	87.3	86.5	6.2	2.1	1.9	0.6	2.5	0.0130	45
7.5	GM2EL 132 M 2	2910	13.6	24.6	0.90	88.5	88.5	87.9	7.2	2.3	3.0	1.0	3.4	0.014	64.5
11.00	GM2EL 160 M 2a	2945	19.3	35.9	0.92	89.5	89.5	88.6	6.0	2.0	1.7	0.6	2.4	0.0270	105
15.00	GM2EL 160 M 2b	2945	26.1	48.6	0.92	90.4	90.4	89.7	7.2	2.4	2.1	0.7	2.8	0.0350	117
18.50	GM2EL 160 L 2	2950	32.3	59.9	0.91	90.9	90.8	90.1	7.7	2.6	2.5	0.8	3.0	0.043	135
22.00	C.GM2EL 160 L 2	2950	37.4	71.4	0.92	91.3	91.3	90.8	7.1	2.4	2.3	0.8	2.6	0.05	145
22.00	GM2EL 180 M 2	2950	38.3	71.2	0.91	91.3	91.3	90.8	8.2	2.6	3.0	1.0	3.5	0.066	158
30	GM2EL 200 L 2a	2970	52	96	0.91	92.0	92.0	91.2	8.3	2.7	2.7	0.9	3.0	0.13	210
37	GM2EL 200 L 2b	2970	65	119	0.89	92.6	92.6	91.7	8.3	2.7	2.7	0.9	3.0	0.15	240

4 pole, 1500 min^{-1}

5.5	GM2EL 132 S 4	1465	11.2	35.9	0.81	87.9	88.0	87.2	7.0	2.3	2.8	0.9	3.5	0.021	53
7.5	GM2EL 132 M 4	1465	15.4	48.9	0.79	89.0	89.1	88.1	7.1	2.3	2.7	0.9	3.4	0.026	61
11.00	GM2EL 160 M 4	1465	21.6	71.5	0.82	90.0	90.1	89.3	6.8	2.3	2.4	0.8	3.0	0.0610	113
15.00	GM2EL 160 L 4	1470	29.4	96.7	0.81	90.6	90.7	89.7	7.4	2.5	2.8	0.9	3.2	0.0820	132
18.50	GM2EL 180 M 4	1470	34.5	120	0.85	91.3	91.4	90.4	7.7	2.5	3.2	1.0	3.4	0.13	165
22.00	GM2EL 180 L 4	1470	42.5	143	0.82	91.7	91.7	90.6	8.3	2.7	2.7	1.2	3.8	0.15	180
30.00	GM2EL 200 L 4	1470	53.5	194.6	0.87	92.5	92.6	92.1	7.8	2.6	2.8	0.9	2.8	0.2270	263

6 pole, 1000 min^{-1}

3.00	GM2EL 132 S 6	960	7.1	30.3	0.73	83.3	83.2	80.4	4.2	1.4	1.6	0.5	2.2	0.0190	50
4.00	GM2EL132 M 6a	960	9.3	40.2		84.6	84.5	81.6	4.7	1.6	2.0	0.7	2.5	0.024	60
5.50	GM2EL 132 M 6b	960	12.7	54.7	0.72	86.0	86.0	83.1	4.9	1.6	2.2	0.7	2.6	0.032	70
7.50	GM2EL 160 M 6	975	17.9	73.4	0.69	87.2	87.2	84.5	6.3	2.1	2.6	0.9	3.5	0.0760	105
11.00	GM2EL 160 L 6	970	22.5	108.7	0.80	88.7	88.7	85.7	6.2	2.1	3.0	1.0	3.0	0.1090	133
15.00	GM2EL 180 L 6	965	29	148	0.83	89.7	89.7	86.8	6.5	2.1	2.4	0.8	3.0	0.2	186
18.50	GM2EL 200 L 6a	980	37.7	180.5	0.78	90.4	90.4	87.7	7.2	2.4	2.3	0.8	3.2	0.2340	216
22.00	GM2EL 200 L 6b	980	43.4	215.4	0.80	91.1	91.1	88.4	6.7	2.2	2.3	0.8	2.8	0.2830	236

Efficiencies are calculated according to indirect method where the additional load losses are determined from exact measurements at different load points. (IEC 60034-2-1 : 2014)

ELIT SERIES - DIMENSIONS

FOOT MOUNTED (B3)

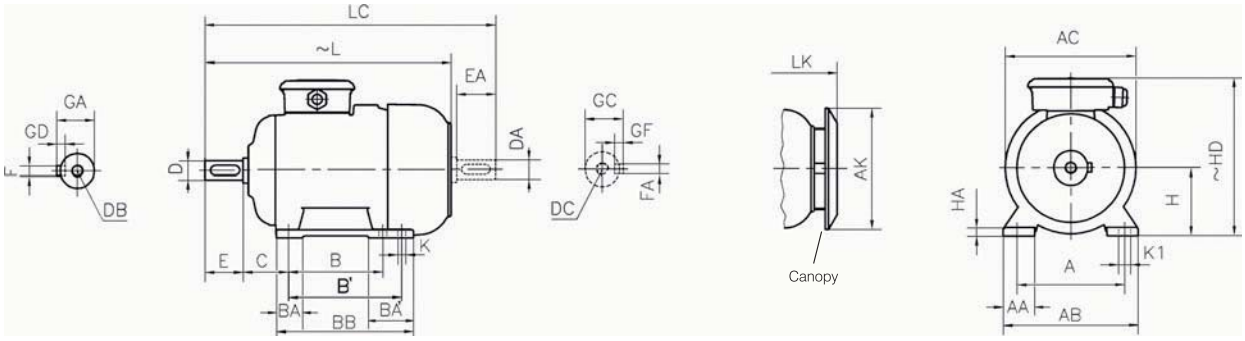

ALUMINIUM HOUSING

Frame size		Number of pole	Dimensions of foot mounted motors for mounting arrangements : B3, B6, B7, B8 , B15, V5 , V6																							
			H	HD ~	HA	A	AA	AB	ØAC	ØAK	K	K1	B	B'	BA	BA'	BB	L ~	LC	LK ~	C	E EA	DB[1] DC	Ø D Ø DA	GA GC	FxGD FAxGF
132	S	2-4-6-8	132	307	15	216	50	260	262	239	12		140		55		140	483.5	572	520.5	89	80	M12	38	41	10x8
	M												178				178	528.5	617	565.5						
160	M	2-4-6-8	160	390	22	254	63	312	315	303	15		210		70		210	629.5	745.5	686.5	108	110	M16	42	45	12x8
	L												254				254	674.5	790.5	731.5						
180	M	2-4-6-8	180	430	24	279	74	354	354	303	15		241		75		241	686	802	743	96	110	M16	48	51.5	x14x9
	L												279				279	723	839	780						
200	L	2-4-6-8	200	489	26	318	81	398	394	370	19		305		80		305	819	937	875	133	110	M20	55	59	16x10

CAST IRON HOUSING

Frame size		Number of pole	Dimensions of foot mounted motors for mounting arrangements : B3, B6, B7, B8 , B15, V5 , V6																				
			H	HD ~	HA	A	AA	AB	ØAC	ØAK	K	B	BA	BB	L ~	LC	LK ~	C	E EA	DB[1] DC	Ø D Ø DA	GA GC	FxGD FAxGF
132	S	2-4-6-8	132	307	15	216	50	260	262	239	12	140	50	180	486	572	523	89	80	M12	38	41	10x8
	M											178		218	531	617	568						
160	M	2-4-6-8	160	390	22	254	63	312	315	303	15	210	62.3	260	629.5	745.5	686.5	108	110	M16	42	45	12x8
	L											254	70	304	674.5	790.5	731.5						
180	M	2-4-6-8	180	430	24	279	74	354	354	303	15	241	60	291	686	802	743	121	110	M16	48	51.5	x14x9
	L											279	70	329	723	839	780						
200	L	2-4-6-8	200	489	26	318	81	398	394	370	19	305	72.5	355	819	937	875	133	110	M20	55	59	16x10

ELIT SERIES - DIMENSIONS

FLANGE MOUNTED (FORM A-B5)

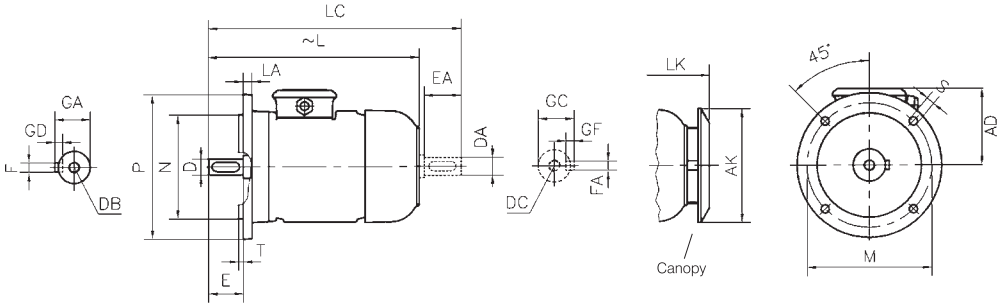

Note: The seating face of the flange lies in the same plane as the shoulder on the shaft

ALUMINIUM HOUSING

Frame size		Dimensions of flanged motors : (D-Flange form A - DIN EN 50 347) mounting arrangements B5, V1, V3																		
		Flange No.	ØM	ØN	ØP	Clearance hole		T	LA	AD ~	ØAK	L ~	LC	LK ~	E EA	DB[1] DC	ØD ØDA	GA GC	FxGD FAxGF	Flange Type
						No.	ØS													
132	S	FF 265	265	230	300	4	14.5	4	18	194	239	486	572	523	80	M12	38	41	10X8	Aluminium
	M											531	617	568						
160	M	FF 300	300	250	350	4	18.5	4	20	231	303	629.5	745.5	686.5	110	M16	42	45	12X8	Aluminium
	L											674.5	790.5	790.5						
180	M	FF 300	300	250	350	4	18.5	5	18	251		686	802	743	110	M16	48	51.5	14X9	Aluminium
	L											723	839	780						
200	L	FF 350	350	300	400	4	18.5	5	20	289		819	937	875	110	M20	55	59	16x10	Aluminium

CAST IRON HOUSING

Frame size		Dimensions of flanged motors : (D-Flange form A - DIN EN 50 347) mounting arrangements B5, V1, V3																		
		Flange No.	ØM	ØN	ØP	Clearance hole		T	LA	AD ~	ØAK	L ~	LC	LK ~	E EA	DB[1] DC	ØD ØDA	GA GC	FxGD FAxGF	Flange Type
						No.	ØS													
132	S	FF 265	265	230	300	4	14.5	4	18	194	239	486	572	523	80	M12	38	41	10X8	Cast Iron
	M											531	617	568						
160	M	FF 300	300	250	350	4	18.5	4	20	231	303	629.5	745.5	686.5	110	M16	42	45	12X8	Cast Iron
	L											674.5	790.5	790.5						
180	M	FF 300	300	250	350	4	18.5	5	18	251		686	802	743	110	M16	48	51.5	14X9	Cast Iron
	L											723	839	780						
200	L	FF 350	350	300	400	4	18.5	5	20	289		819	937	875	110	M20	55	59	16x10	Cast Iron

ELIT SERIES - DIMENSIONS

FOOT AND FLANGE MOUNTED (FORM A-B5)

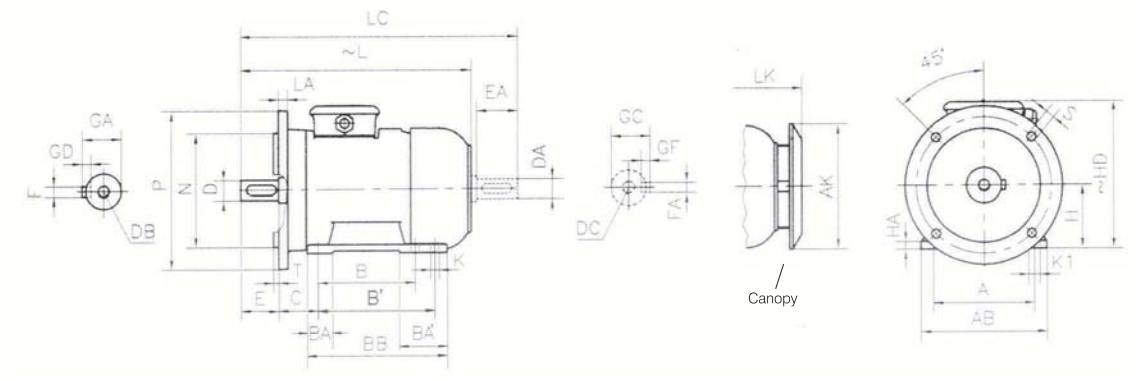

Note: The seating face of the flange lies in the same plane as the shoulder on the shaft

ALUMINIUM HOUSING

Frame size		Dimensions of foot and flange mounted motors : (D-Flange form A-DIN EN 50 347) mounting arrangements B35																											
		H	HD ~	HA	A	AB	ØAK	K	K1	B	B'	BA	BA'	BB	Flanş	ØM	ØN	ØP	No	ØS	T	LA	L ~	LC	LK ~	C	E EA	DB[1] DC	ØD ØDA	GA GC	FxGD FAxGF
132	S	132	307	15	216	260	239	12	-	140	-	55	-	180	FF 265	265	230	300	4	14.5	4	18	483.5	572	520.5	89	80	M12	38	41	10X8
	M									178				218									528.5	617	565.5						
160	M	160	390	22	254	312	303	15	-	210	-	70	-	260	FF 300	300	250	350	4	18.5	4	20	629.5	745.5	686.5	108	110	M16	42	45	12X8
	L									254				304									674.5	790.5	731.5						
180	M	180	430	24	279	354	303	15	-	241	-	75	-	291	FF 300	300	250	350	4	18.5	5	18	686	802	743	96	110	M16	48	51.5	14X9
	L									279				329									723	839	780						
200	L	200	489	26	318	398	370	19	-	305	-	80	-	365	FF 350	350	300	400	4	18.5	5	20	819	937	875	133	110	M20	55	59	16X10

CAST IRON HOUSING

Frame size		Dimensions of foot and flange mounted motors : (D-Flange form A-DIN EN 50 347) mounting arrangements B35																											
		H	HD ~	HA	A	AB	ØAK	K	K1	B	B'	BA	BA'	BB	Flanş	ØM	ØN	ØP	No	ØS	T	LA	L ~	LC	LK ~	C	E EA	DB[1] DC	ØD ØDA	GA GC	FxGD FAxGF
132	S	132	326	15	216	260	239	12	-	140	-	50	-	180	FF 265	265	230	300	4	14.5	4	18	486	572	523	89	80	M12	38	41	10X8
	M									178				218									531	617	568						
160	M	160	390	22	254	312	303	15	-	210	-	62.3	-	260	FF 300	300	250	350	4	18.5	4	20	629.5	745.5	686.5	108	110	M16	42	45	12X8
	L									254		70		304									674.5	790.5	731.5						
180	M	180	431	24	279	354	303	15	-	241	-	60	-	291	FF 300	300	250	350	4	18.5	5	18	686	802	743	121	110	M16	48	51.5	14X9
	L									279		70		329									723	839	780						
200	L	200	489	26	318	398	370	19	-	305	-	72.5	-	355	FF 350	350	300	400	4	18.5	5	20	819	937	875	133	110	M20	55	59	16X10

ELIT SERIES - DIMENSIONS

FLANGE MOUNTED (FORM C-B14)

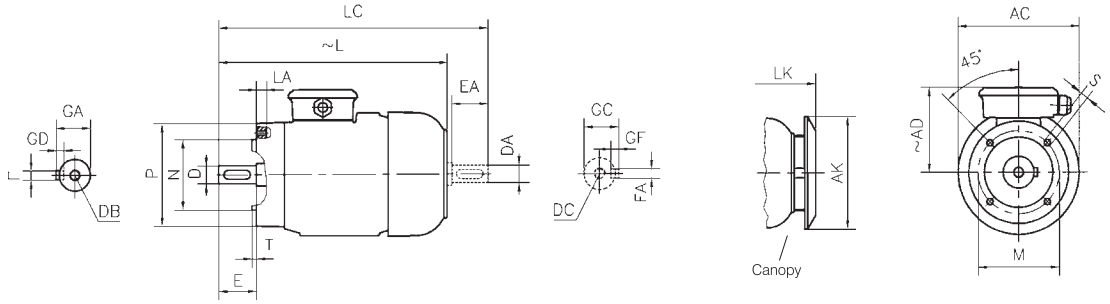

Note: The seating face of the flange lies in the same plane as the shoulder on the shaft

ALUMINIUM HOUSING

Frame size		Dimensions of flanged motors : (C-Face Flange form C - DIN EN 50 347) mounting arrangements B14, V18, V19																	
		Flange No.	ØM	ØN	ØP	S	T	LA[4]	Ø AC	Ø AK	AD ~	L ~	LC	LK ~	E EA	DB[1] DC	Ø D Ø DA	GA GC	FxGD FAxGF
132	S	FT 165	165	130	250	M10	3.5	19	262	239	194	483.5	572	520.5	80	M12	38	41	10X8
	M											528.5	617	565.5					
160	M	FT 215	215	180	250	M12	4	21	315	303	230.5	629.5	745.5	686.5	110	M16	42	45	12X8
	L											674.5	790.5	731.5					

CAST IRON HOUSING

Frame size		Dimensions of flanged motors : (C-Face Flange form C - DIN EN 50 347) mounting arrangements B14, V18, V19																	
		Flange No.	ØM	ØN	ØP	S	T	LA[4]	Ø AC	Ø AK	AD ~	L ~	LC	LK ~	E EA	DB[1] DC	Ø D Ø DA	GA GC	FxGD FAxGF
132	S	FT 165	165	130	250	M10	3.5	19	262	239	194	486	572	523	80	M12	38	41	10X8
	M										194	531	617	568					
160	M	FT 215	215	180	250	M12	4	21	315	303	230.5	629.5	745.5	686.5	110	M16	42	45	12X8
	L										230.5	674.5	790.5	731.5					

ELIT SERIES - DIMENSIONS

FOOT AND FLANGE MOUNTED (FORM C-B34)

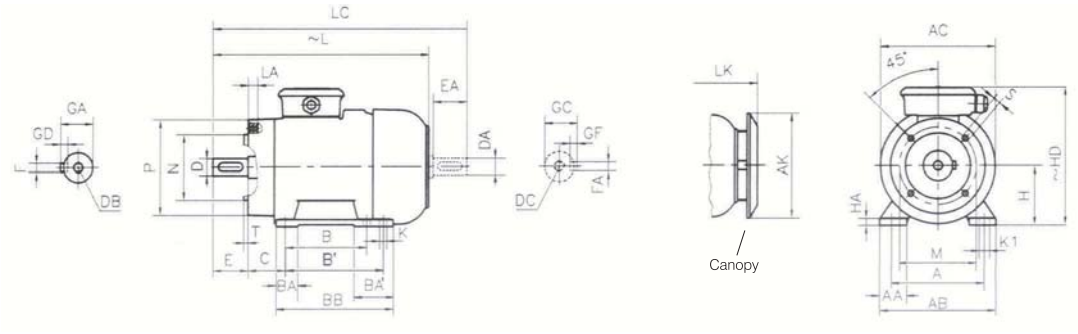

Note: The seating face of the flange lies in the same plane as the shoulder on the shaft

ALUMINIUM HOUSING

Frame size		Dimensions of foot and flange mounted motors : (C-Face Flange form C - DIN EN 50 347) mounting arrangements B34																													
		H	HD ~	HA	A	AA	AB	ØAC	ØAK	K	K1	B	B'	BA	BA'	BB	Flanş No.	ØM	ØN	ØP	S	T	LA[3]	L ~	LC	LK ~	C	E EA	DB[1] DC	Ø D Ø DA	GA GC	FxGD FAxGF
132	S	132	307	15	216	50	260	262	239	12	-	140	-	55	-	180	FT 165	165	130	250	M10	3.5	19	483.5	572	520.5	89	80	M12	38	41	10X8
	M											178				218								528.5	617	565.5						
160	M	160	390	22	254	63	312	315	303	15	-	210	-	70	-	260	FT 215	215	180	250	M12	4	21	629.5	745.5	686.5	108	110	M16	42	45	12X8
	L											254				304								674.5	790.5	731.5						

CAST IRON HOUSING

Frame size		Dimensions of foot and flange mounted motors : (C-Face Flange form C - DIN EN 50 347) mounting arrangements B34																													
		H	HD ~	HA	A	AA	AB	ØAC	ØAK	K	K1	B	B'	BA	BA'	BB	Flanş No.	ØM	ØN	ØP	S	T	LA[3]	L ~	LC	LK ~	C	E EA	DB[1] DC	Ø D Ø DA	GA GC	FxGD FAxGF
132	S	132	326	15	216	50	260	262	239	12	-	140	-	55	-	180	FT 165	165	130	250	M10	3.5	19	486	572	523	89	80	M12	38	41	10X8
	M											178				218								531	617	568						
160	M	160	390	22	254	63	312	315	303	15	-	210	-	62.3	-	260	FT 215	215	180	250	M12	4	21	629.5	745.5	686.5	108	110	M16	42	45	12X8
	L					60						254		70		304								674.5	790.5	731.5						

ELIT SERIES SPARES

The spare-parts are fully interchangeable as they are designed and manufactured to fine limits of their dimensional tolerances. Please state motor type, serial number, type of construction-mounting arrangement and part number with full description when ordering spare parts.

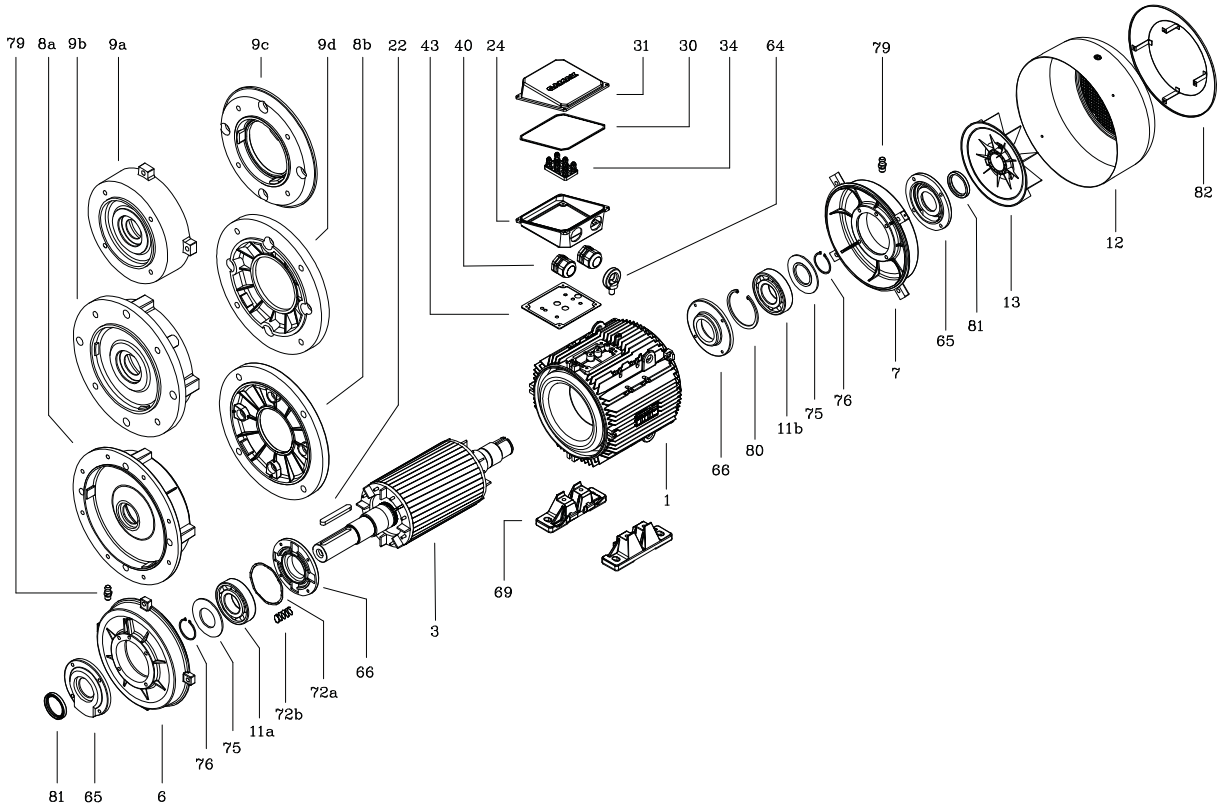

Part No.	Description
1 -	Stator complete with winding, varnished and fitted in the frame
3 -	Rotor complete with shaft, finish machined and balanced (Exluding keys)
6 -	End shield Drive-end B3 mounting
7 -	End shield Non Drive-end
8a -	Flange (Form A)
8b -	Attachable Flange (Form A) - 132 type only
9a -	Flange (Form C)
9b -	Flange (Form C - Large)
9c -	Attachable Flange (Form C) - 132 type only
9d -	Attachable Flange (Form C - Large) - 132 type only
11a -	Bearing Drive-end (Ball or Roller)
11b -	Ball-bearing Non Drive-end
12 -	Fan cover
13 -	Fan
22 -	Shaft key
24 -	Terminal-box
30 -	Terminal-box to lid gasket
31 -	Terminal-box lid
34 -	Terminal board complete with terminal links, nuts and washers
40 -	Cable-gland
43 -	Terminal-box to frame gasket
64 -	Eye bolt
65 -	External bearing cap (motors with greasing nipples)
66 -	Internal bearing cap (motors with greasing nipples)
69 -	Removable feet - Aluminium housings only
72a -	Corrugated disc spring for preloading ball-bearing
72b -	Helical compression spring
75 -	Grease retaining disc (motors with greasing nipples)
76 -	External circlip for retaining ball-bearing and grease retaining disc on the shaft
79 -	Greasing nipple (132 to 200 optional)
80 -	Internal circlip for retaining ball-bearing at N.DE
81 -	V-Ring

GENERAL INFORMATION ON FREQUENCY CONVERTER FED A.C. CAGE INDUCTION MOTORS

The static frequency converter is an electronic unit for infinite speed control of A.C. motors by providing a power supply of variable frequency and voltage simultaneously. A full stepless variable and practically accurate speed is obtained when an A.C. cage induction motor is fed by a suitably designed converter.

Frequency converters are grouped into two according to the switching pattern controlling the motor supply. The commonly used type so called PWM converter has a constant intermediate D.C. voltage and Pulse Width Modulated output voltage. Another type with intermediate D.C. voltage is the PAM (Pulse Amplitude Modulation) converter.

Speed Control of A.C. Cage Induction Motors

Today, the frequency converter controlled A.C. cage induction motors are used for all kinds of automated plant and equipment. The infinite speed control of A.C. motors gives the advantages of energy saving, process and quality improvements.

Extensive calculations and measurements show that the best operating characteristics can be obtained with 4 pole A.C. cage induction motors for all common speed ranges, therefore, this number of pole is preferred for variable-speed motors. For applications with very low or high speeds, different numbers of pole might also be considered. The rated voltage of the motor is usually chosen as the mains supply voltage in order to allow the motor to run directly from the mains supply in the event of frequency converter failure.

Standard motors are generally used with frequency converter, in any case for the lower power ranges. There are different precautions taken depending on the power range involved and other requirements. A common feature of all systems is that there are additional losses in the motor caused by inverter output voltages and currents which are effected by harmonic compenents, as the voltage is not fully sinusoidal. Hence, the motor cannot provide its rated output. Usual practice is to derate the output of the motor by 0-20% at rated speed to compensate for the increase in losses. To determine the derating factor, the thermal reserve of a particular motor has to be considered. (IEC 60 034-17 application guide for cage induction motors when fed from converters).

Due to the very high rate of voltage rise and the possibility of transient voltages at the motor terminals, the insulation system of inverter-fed induction motors may be subject to greater stress than that of mains-operated motors. Apart from the leakage reactance of the motor, this additional stress mainly depends on the frequency converter used and the cable length between the frequency converter and motor. Consequently it may be necessary to consider shorter cable length, filter requirement and in some cases special insulation systems. In practice the cable length must be as short as possible, therefore motors integral with frequency converters which is among production range of GAMAK is recommended for variable speed applications.

The double cage or deep-bar rotor design should be avoided particularly on large motors due to high harmonic losses. It may be preferable to use different rotor configurations as there is no need of a high starting from the mains. In the event of frequency converter failure, it must be remembered that rotor with specially designed bars may not start from the mains particularly if it is a constant torque application.

A motor fed by a converter may run noisier than a standard main supply fed motor due to harmonics. This can be reduced by suitable motor and converter design.

Another influence of the frequency converter is the voltage induced at the motor shaft. If these voltages are sufficient, damaging currents may flow in unintended circuits through the bearings, resulting in premature failure. Failure due to bearing currents is seldom encountered, but for security of operation in large motors, insulated non-drive-end bearing assembly may be foreseen. Please refer to page 56 for more details about shaft voltages.

Operation of an A.C. induction motor below and above its rated speed

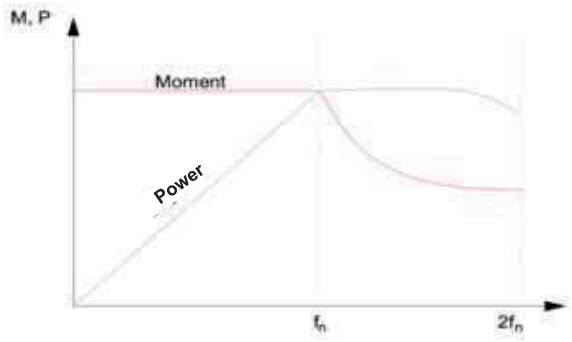

Above curve shows how the motor output and torque changes below and above its rated speed. An a.c. induction motor can deliver constant torque when run below its rated speed and can deliver constant output when run above its rated speed, but due to field weakening at above ~ 85 Hz., losses increase requiring further derating.

Motor below rated speed ;

The motor can be loaded at constant torque when the frequency is reduced and the primary voltage is changed in proportion to the frequency. Both current and power-factor will remain unchanged if the torque is kept constant. However, at low frequency, if the same maximum torque is to be maintained, the voltage should also be slightly more than proportional to the frequency, in order to compensate for the voltage drop in the stator.

For variable torque loads, when the torque reduces with decreasing speed such as with centrifugal pumps and fans, it is better to choose a converter so that the voltage decreases more than the frequency.

At low speeds, the motor fan cannot supply sufficient amount of cooling air when the load torque is constant across the speed range. The dissipation of heat from the motor is poorer and is only partly offset by the decrease in iron losses. For self ventilated motors with a wide speed range, it may be necessary to derate the motor output or alternatively use forced ventilation.

Encoder integration :

Encoders are usually requested to be mounted to the shafts of the motors if accurate speed control is required at a constant torque application especially when speed is very low. In the event an encoder is requested, it is mounted directly to the motor shaft extension at NDE side. Hollow shaft encoders are preferred by GAMAK as it eliminates the need for a flexible coupling and saves space. The encoder of which technical details is determined by end-user can be either sourced by GAMAK or delivered by the customer and fitted to the motor NDE shaft extension.

Following parameters should be considered when selecting an encoder ;

- Number of pulse
- Dimensions (hollow shaft encoder)
- Supply voltage
- Type of signal

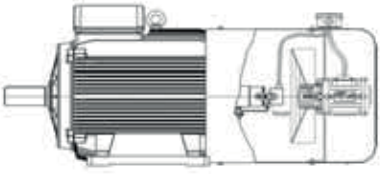

In addition to above, encoder bearings as well may need to be electrically insulated.

In general, encoders are used at constant torque applications especially at low speed which also may requisite for forced ventilation. Below diagram shows integration of an encoder with a forced ventilation unit.

The overall length ("L") of the motor varies according to the type and dimensions of the encoder but as a thumb rule, increases about 100 mm.

Forced Ventilation Kit

Forced ventilation kit is mounted on the motor to provide constant cooling independent of the motors shaft speed. Following figure shows how it is mounted to the motor and the table below gives overall length of the motor after fitting the forced ventilation kit.

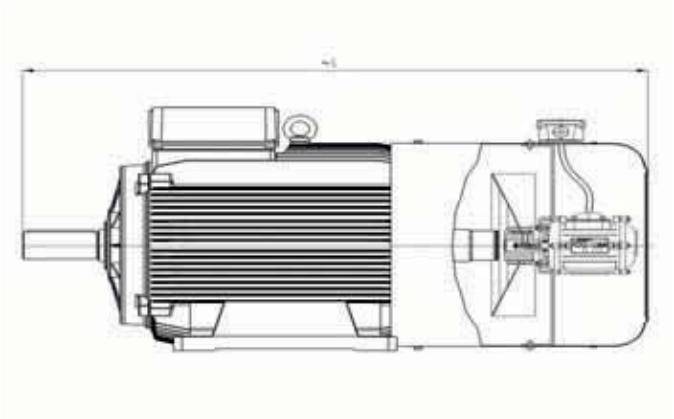

Aluminium frame Motors

Frame Size		Number of Pole	~L (mm)
71		2-4-6-8	372
80		2-4-6-8	406
90	S	2-4-6-8	444
	L		469
100	L	2-4-6-8	522
112	M	2-4-6-8	537
132	S	2-4-6-8	607
	M		645
160	M	2-4-6-8	831
	L		
180	M	2-4-6-8	904
	L		
200	L	2-4-6-8	1021

Cast-iron frame motors

Frame Size		Number of Pole	~L (mm)
132	S	2-4-6-8	649
	M		
160	M	2-4-6-8	831
	L		875
180	M	2-4-6-8	904
	L		942
200	L	2-4-6-8	1021
225	S	4-8	1093
	M	2	1093
		4-6-8	1118
250	M	2	1150
		4-6-8	
280	S	2	1219
		4-6-8	
	M	2	
		4-6-8	

Cast-iron frame motors

Frame Size		Number of Pole	~L (mm)
315	S	2	1405
		4-6-8	1435
	M	2	1405
		4-6-8	1435
	L	2	1475
		4-6-8	1505
355	M	2	1617
		4-6-8	1657
	L	2	1687
		4-6-8	1727
400	L	2	1944
		4-6-8	1984
450	L	2	2220
		4-6-8	2250

Increasing the speed of an A.C. Cage induction motor above its rated speed ;

As the frequency converter cannot supply a voltage that is higher than the voltage from the mains supply, the magnetic field is weakened due to the reduction of voltage-frequency ratio. This in turn results in the motor to yield a reduced torque above its rated speed and will only supply constant power. Depending on the breakdown torque at the rated operation, the motor should continue to operate at constant output upto a speed when the power starts to reduce. At higher frequencies, due to severe field weakening, the increased slip increases the I^2R losses. Additionaly, skin effect can start having a detrimental effect.

Although the losses at high speed limit motor operation to a constant power characteristic above the base speed, maximum speed limit is determined by :

- Breakdown torque.
- Bearing capability: The bearings will be subjected to more mechanical stress due to greater vibration above the rated speeds which will reduce the life of the bearings and the grease. In such case, it is necessary to specify the balancing of the rotors to be the vibration severity grade S- Special (DIN EN 60 034-14).
- Fan design: The fan should be mechanically strong enough to withstand the centrifugal forces. It is usual to consider a shaft mounted fan only upto say 60 Hz. Furthermore, increased fan noise may occur in self ventilated motors. Thus, as an alternative the use of a forced ventilation needs to be considered.

Mechanical limit speeds

When the motor is operated above its rated frequency, the maximum speeds are limited by the limits for the bearings, critical rotor speed and rigidity of the rotating parts.

3000 min^{-1}, 2 pole motors

Output (kW)	Frame Size	Mechanical limit speed (min^{-1})	Maximum supply frequency (Hz)
0,09...5,5	56...112	6000	100
5,5...11	132	5600	90
11...22	160	4800	80
22 - 30	180	4600	76
30...55	200 - 225	4500	75
55...500	250 - 355	3600	60
450...1000	400 - 450	3400	56

1500 min^{-1}, 4 pole motors

Output (kW)	Frame Size	Mechanical limit speed (min^{-1})	Maximum supply frequency (Hz)
0,06...11	56...132	4200	140
11...55	160...225	4200	140
55...110	250 - 280	3600	120
110...250	315	2800	93
250...500	355	2400	80
450...1000	400 - 450	2200	73

1000 min^{-1}, 6 pole motors

Output (kW)	Frame Size	Mechanical limit speed (min^{-1})	Maximum supply frequency (Hz)
0,18...5,5	71...132	3900	195
7,5...15	160 - 180	3600	180
18,5...37	200 - 225	3200	160
37 - 75	250 - 280	3000	150
75...160	315	2600	130
160...355	355	2400	120
355...800	400 - 450	2200	110

750 min^{-1}, 8 pole motors

Output (kW)	Frame Size	Mechanical limit speed (min^{-1})	Maximum supply frequency (Hz)
0,09...11	71...180	3200	213
15...45	200...280	3000	200
55...132	315	2600	173
132...315	355	2400	160
315...630	400 - 450	2200	147

Shaft Voltages :

Variable Frequency Drives induce shaft voltages onto the shaft of the driven motor because of the high speed switching of the semi-conductors (IGBT). The induced voltage on the shaft might be high enough to overcome the dielectric of the oil film in the bearing causing bearing discharges known as electrical discharge effect. This electrical discharge would damage the bearings and finally cause a motor failure. The main precaution, to prevent the damage on bearings caused by shaft voltages, is to use insulated bearings on non drive-end side of the motor. GAMAK can offer either insulated bearing or insulated end-shield design. Insulating the bearing housing at the end-shield with ceramic is more practical and long life solution because bearings have limited life which must be replaced when failed. If insulated bearing is used, then bearing manufacturers quote very long lead times and charge as much as ten times the standard bearing price. In case the end-shield is insulated, only standard bearing will be replaced.

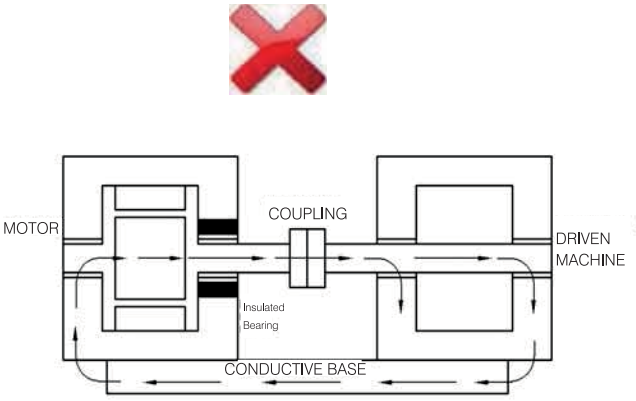

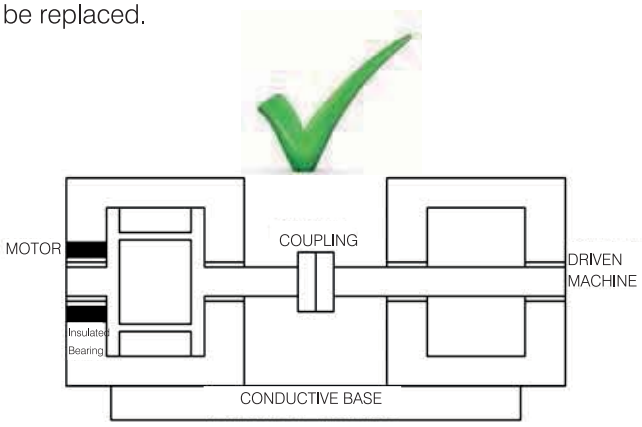

In theory, shaft voltages may be induced on the shafts of motors above 110 kW, however in practice it is generally observed on the shafts of motors above 400 kW.

Important Note : For motors below 110 kW, there is also a risk of capacitive discharge current flow which is caused by the common-mode voltage of Inverter output. To avoid this risk, please follow the rules of IEC 60034-25 and apply the appropriate earthing and if possible use common-mode filtres at the output of Inverter.

SINGLE PHASE MOTORS

	Page
• **Standard Induction Motors**	71...79
- Permanent Split Capacitor Motors - Capacitor Start / Capacitor Run Motors	
• **Shaded Pole Motors**	80-81

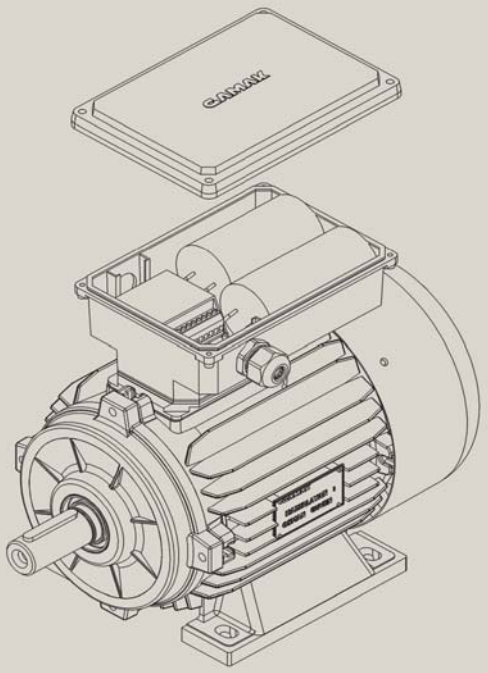

SINGLE PHASE, TOTALLY ENCLOSED (IP 55) GENERAL PURPOSE CAGE INDUCTION MOTORS

In many respects, single phase motors have the same properties as three-phase motors and mechanically they meet the same standards. The rotating field which develops the torque of the motor is formed by main and auxiliary windings. Dependent on the application, it is possible to use either permanent split capacitor motor or capacitor start/capacitor run motor. Each type has its benefits and limitations as described below :

Permanent split capacitor motors

This type of single-phase motors have one capacitor mounted in the terminal box, permanently connected in series with the auxiliary winding. Efficiency and power factors are improved. Starting torque is between 50% - 80% of full load torque which makes this design particularly suitable for applications that require a light starting torque, such as circular saws, drilling machines, polishing machines, lawn movers, fans and blowers.

Capacitor start / Capacitor run motors

This type of single-phase motors have two capacitors, short time rated high value starting capacitor and continuously rated low value permanent capacitor and an electronic start relay altogether mounted in the terminal box. The starting torque is between 200% - 250% of full load torque which makes this design particularly suitable for applications that require a high starting torque, such as compressors, hydraulic pumps and centrifugal pump drives with high starting requirements.

The wires coming out from the main and auxiliary windings and the cables of run capacitor and starting capacitor are all connected to the terminals of the electronic start relay. When the mains voltage is switched on to terminals L1 and L2, the main winding, the series connection of the auxiliary winding, the run capacitor and the starting capacitor are energized. The motor thus yields a high starting torque and begins to accelerate. A control circuit in the relay continuously measures the voltage across the auxiliary winding. When the motor has reached about %75-80 of its nominal speed, the electronic relay disconnects the starting capacitor from the starting circuit. The motor then continues to run on the two windings and the permanent capacitor like a normal permanent split capacitor motor.

An independent safety timer is incorporated in the electronic start relay for protecting the starting capacitor, should the rotor be locked or in the event of a very long start. This time function activates the electronic start relay if the motor during a start has not reached its nominal speed within about 2 seconds.

⚠ Maximum three starts are permitted per minute in order to ensure the protection of electrolytic type starting capacitor against damage.

⚠ Starting capacitors are fitted with resistance to ensure that they are discharged. Please consult us for the resistance and capacity values if the capacitors are needed to be replaced with the new ones.

Electronic start relay is designed to function at supply voltage of 220-240 V, 50 / 60 Hz. It eliminates the harmonics associated with the network and is protected against high currents.

The life of all-electronic start relay is endless when compared to centrifugul switches and different types of electromechanical relays.

The centrifugal and automatic switches have the disadvantage that they switch the starting capacitor into the circuit again, if the motor is overloaded. This has the result that the starting capacitor will be destroyed after rather a few overloads or after an excessively long starting period. Furthermore, the auxiliary windings may be damaged. When the electronic start relay has once been actuated, it can only be made to operate again when the motor is de-energized, This consequently prevents the starting capacitor from being switched in again should the motor be overloaded.

⚠ Standard single-phase motors should not run at no-load for a long period as the losses will be higher than that of a full load due to generated overvoltage which in turn will cause a fairly high temperature rise and also a reduction in the lifetime of capacitors.

Frames, end-shields and flanges

Frame size 63...112, the frames, end-shields and the flanges are made of aluminium alloy which is pressure die-casting and resistible to corrosion. B14/FT165 flanges on frame size 112 motors are cast iron.

Enclosure degrees of protection

GAMAK motors are manufactured as totally enclosed in conformity with the protection degree IP 55 which permits them to work in the ambient of dirty and humidity conditions. Upon request, any production can be made according to protection class IP 56, as well.

Terminal box

All the terminal boxes comply with degree of protection IP 65, and are placed to the front and on top of motor frames allowing an easy cable entry from both sides. Electronic start relay, start and the permanent capacitors are located in the motor terminal box and a connecting diagram is provided in the cover of terminal box.

Cable entry

Frame size	63	71	80	90	100	112
Dimensions of compression glands	Pg 11	Pg 16				
Number of compression glands	1					
Maximum cable outer dimeter mm	11	16				
Maximum conductor cross section total mm^2	1.5	2.5				

Shaft Extension

The motors of standard design are built with one cylindrical shaft extension with shaft-key fitted in accordance with IEC 60 072-1. The free shaft-ends have threaded center-bore to DIN 332-2 form D. Motors with double shaft extension may be delivered on special orders.

The run-out of the shaft, concentricity of mounting spigot and the perpendicularity of the face flange are within the permissible limits (normal class) according to IEC 60 072-1. Motors with increased accuracy (Precision class) may be supplied on request.

Vibration

Shaft/rotor assemblies of all standard range motors are dynamically balanced with Half Shaft Key to the limits of grade N (normal) mechanical vibration class specified in DIN EN 60 034-14. Shaft fitments such as couplings, pulleys, gears and fans must also be balanced likewise to prevent undue vibration and adverse effects on bearing life.

Painting

The motors are painted in grey according to RAL 7031 (DIN 1843) with a protective paint. Special external coatings for protection against excessive corrosive atmospheres, chemicals and microorganism are available on request.

Storage

Motors must be kept in a dry and vibration free place if they have to be stored for a long period. The insulation resistance must be dried if necessary, before the motors are taken into operation.

Bearings

The motors are fitted with high quality noise tested single-row deep-groove radial ball bearings (DIN 625) which are both side closed (ZZ) and greased by the manufacture for life.

Standard design with single row deep groove ball bearings

Frame size	No. of pole	D.End	N.D. End	Fig. No.
63	2 & 4	6201 ZZ		1
71	2 & 4	6202 ZZ		
80	2 & 4	6204 ZZ		
90	2 & 4	6205 ZZ		
100	2 & 4	6206 ZZ		
112	2	6206 ZZ		

On request, the motors can be manufactured in fixed bearing design (Fig. 2) in order to avoid the movement of the shaft in axial direction.

Arrangement of bearings

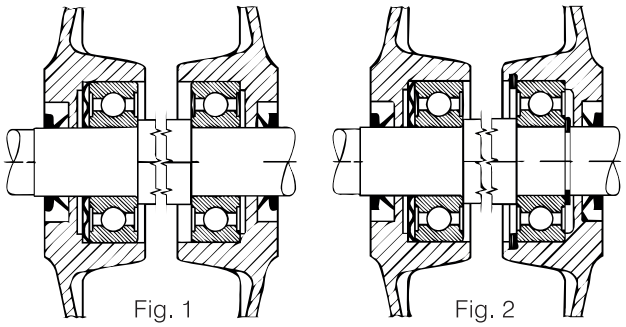

Fig. 1 — D.End: Floating Ball-Bearing (Spring loaded); N.D.End: Floating Ball-Bearing

Fig. 2 — D.End: Floating Ball-Bearing (Spring loaded); N.D.End: Fixed Ball-Bearing

Permissible radial loads

Standard design with single row deep groove ball bearing (Axial Force $F_a = 0$)

Frame size	3000 min^{-1}		1500 min^{-1}	
	Fx_0 (N)	$Fx_{max.}$(N)	Fx_0 (N)	$Fx_{max.}$(N)
63	350	300	450	390
71	400	340	500	420
80	660	540	840	680
90	730	600	910	720
100	1030	820	1300	1050
112	1020	830	-	-

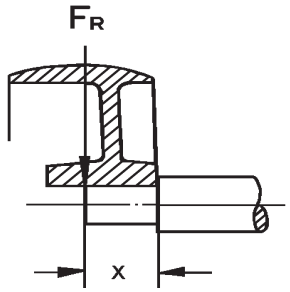

Permissible external axial loads

Frame size	Horizontal Shaft				Vertical Shaft											
	Drawing	Push			Shaft down						Mil above					
					Power down			Power above			Power down			Power above		
	$F_r = 0$	max. F_r		$F_r = 0$	max. F_r		$F_r = 0$	max. F_r		$F_r = 0$	max. F_r		$F_r = 0$	max. F_r		$F_r = 0$
		X_0	X_{max}		X_0	X_{max}		X_0	X_{max}		X_0	X_{max}		X_0	X_{max}	
	N	N	N	N	N	N	N	N	N	N	N	N	N	N	N	N
2 pole (3000 min^{-1})																
63	80	170	150	220	70	70	70	180	150	230	160	140	210	90	90	90
71	100	180	160	230	90	90	90	190	170	250	170	140	220	110	110	110
80	140	320	270	400	120	120	120	340	290	430	300	240	390	160	160	160
90	160	350	290	430	130	130	130	370	320	470	310	250	400	190	190	190
100	220	490	400	590	170	170	170	520	440	650	420	330	540	270	270	270
112	220	490	410	590	160	160	160	530	450	660	410	330	530	280	280	280
4 pole (1500 min^{-1})																
63	80	260	230	330	70	70	70	270	240	340	250	230	320	90	90	90
71	100	280	250	350	90	90	90	290	260	370	260	220	340	120	120	120
80	140	490	420	610	120	120	120	510	440	640	460	390	590	170	170	170
90	160	530	440	650	120	120	120	570	480	700	480	400	610	200	200	200
100	220	740	630	880	150	150	150	790	670	960	650	540	830	290	290	290

Voltage and Frequency

Single phase motors are normally wound for the rated supply voltages of 230V and frequency 50/60 Hz. However, motors for a supply voltage of 110V may be supplied on request. Motors will operate satisfactorily within voltage band of ±%5 of the rated voltage and ±%2 of the rated frequency. In case of continuous operation at the extreme voltage limits specified above, the temperature rise limits permitted for various insulation classes may be exceeded by 10 K maximum.

Rated output

The rated output P_N is the mechanical power in Watts available at the shaft, and it is specified on the motor name-plate. The active power P_1, is the power in Watts transmitted from the supply to the motor and it is always bigger than the mechanical power due to losses.

P_1 (W) = U.I.Cos φ

Efficiency (η), is the ratio of the mechanical power to the active power. The efficiency values given in the catalog are calculated by the method of summation of losses according to IEC 60 034-2-1:2007.

The rated outputs tabulated in this catalogue expressed in kW, refer to the mechanical power where motor is running continuously (S1) at rated load, voltage, frequency, at ambient temperature not exceeding +40°C and an altitude of installation upto 1000 m above sea-level..

Rated Torque

The torque transmitted to the motor shaft is :

$$\text{Rated torque (Nm)} = 9550 \frac{\text{Rated output (kW)}}{\text{Rated speed (min}^{-1})}$$

The load-torque of a motor during acceleration must always be bigger than the opposing torque of the driven machine.

⚠ Rotating magnetic field in single phase motors is formed with one phase of the A.C. supply which results with lower starting and/or nominal torque compared to three phase motors. In the event single phase motors are preferred instead of 3-phase motors, please consult GAMAK for detailed performance comparison.

Reversing direction of rotation

Single phase motors can rotate to both directions like 3-phase motors.

The direction of rotation of a split phase permanent capacitor motor can be reversed as per connection diagram below :

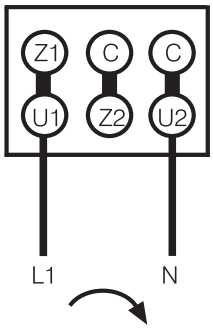

Clockwise
(when viewed from drive end)

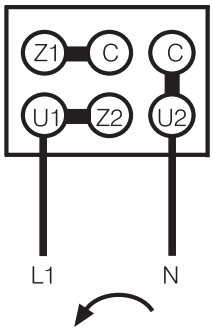

Anticlockwise
(when viewed from drive end)

To change direction of rotation at Capacitor start/Capacitor run motors, swap main winding leads (black-brown) at U1 and U2 terminals on the electronic relay.

Direction of rotation must be checked by instant on/off before the motor is coupled to the driven machine.

No-load operation

The voltage induced at the capacitors of single phase motors reaches to its maximum value when run at no load which results in reduction of capacitor life. Furthermore, single phase motors must not run at no load for long periods as losses at no load running is higher than that it is at full load running. Please consult GAMAK if long period of no-load running is required for the application as special winding may be necessary.

RATINGS AND PERFORMANCE

Permanent Split Capacitor Motors

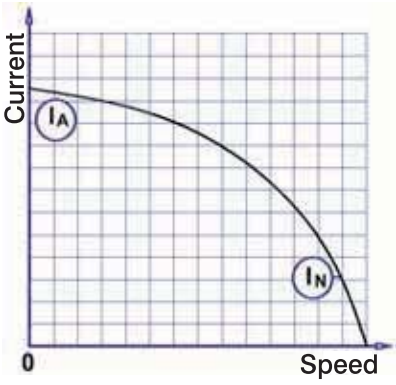

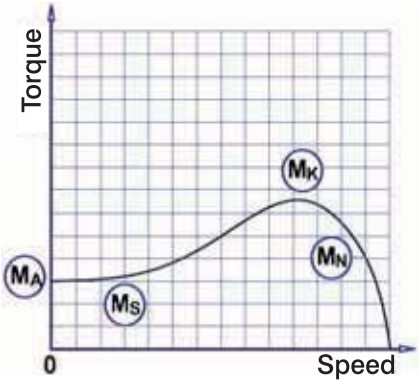

Single Phase, 230 V, 50 Hz
Duty Type : S1 (continuous)
Degree of protection : IP 55
Insulation Class : F (155 °C)
Temp. Rise : B (80 K)

Rated output	Type	Full - load data					Starting data		Breakdown torque ratio	Permanent capacitor	Moment of inertia	Weight approx.
		Speed	Current I_N	Torque M_N	Power factor	Efficiency η	Current ratio	Torque ratio			J	B3
kW		min^{-1}	A	Nm	Cos φ	%	I_A/I_N	M_A/M_N	M_K/M_N	µF	kgm^2	kg
2 pole (3000 min^{-1})												
0,18	MD 63 2a	2860	1,3	0,60	0,94	64	4,2	0,85	2,4	8	0,00012	4,2
0,25	MD 63 2b	2870	1,6	0,83	0,98	69	4,0	0,75	2,2	10	0,00014	4,6
0,37	MD 71 2a	2885	2,5	1,22	0,96	67	4,0	0,65	2,2	15	0,00028	5,9
0,55	MD 71 2b	2865	3,5	1,83	0,98	70	3,9	0,72	2,3	20	0,00035	6,8
0,75	MD 80 2a	2770	5,0	2,59	0,96	68	3,3	0,88	1,9	30	0,00056	9,0
1,1	MD 80 2b	2770	7,0	3,79	0,95	72	3,8	0,93	2,0	35	0,00070	10,4
1,5	MD 90 S 2	2820	9,8	5,08	0,91	73	4,2	0,60	2,0	40	0,00113	13,3
2,2	MD 90 L 2	2800	13,5	7,50	0,95	75	3,4	0,50	1,7	50	0,00141	15,6
3	MD 100 L 2	2850	17,7	10,05	0,97	76	4,7	0,49	2,2	60	0,00260	20,1
4 pole (1500 min^{-1})												
0,12	MD 63 4a	1430	1,1	0,80	0,91	52	2,6	0,69	2,1	8	0,00019	4,1
0,18	MD 63 4b	1390	1,5	1,24	0,93	56	2,3	0,84	1,8	10	0,00023	4,6
0,25	MD 71 4a	1425	1,8	1,68	0,93	65	3,2	0,73	2,1	10	0,00048	6,1
0,37	MD 71 4b	1435	2,6	2,46	0,91	68	2,8	0,65	1,9	15	0,00056	6,6
0,55	MD 80 4a	1410	3,3	3,73	0,97	75	3,4	0,51	1,7	20	0,00092	8,7
0,75	MD 80 4b	1405	4,6	5,10	0,98	72	3,5	0,55	1,8	30	0,00123	10,3
1,1	MD 90 S 4	1410	7,1	7,45	0,96	70	3,5	0,63	1,9	35	0,00209	13,3
1,5	MD 90 L 4	1410	9,3	10,16	0,96	72	3,3	0,57	1,8	50	0,00265	15,8
2,2	MD 100 L 4a	1425	13,4	14,74	0,93	77	4,1	0,40	1,8	60	0,0044	21,0
3	MD 100 L 4b	1425	19,0	20,11	0,86	80	3,6	0,30	1,7	60	0,0051	23,2

RATINGS AND PERFORMANCE

Capacitor Start / Capacitor Run Motors

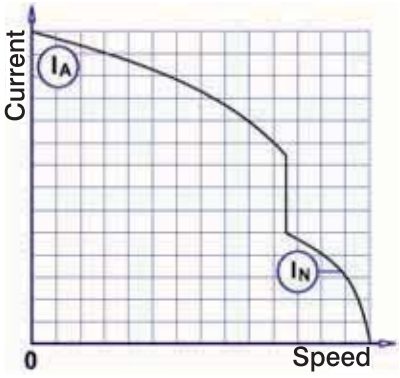

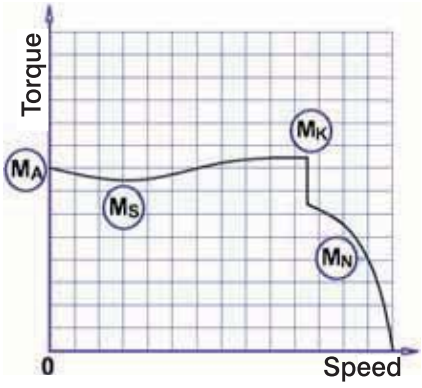

Single Phase, 230 V, 50 Hz
Duty Type : S1 (continuous)
Degree of protection : IP 55
Insulation Class : F (155 °C)
Temp. Rise : B (80 K)

Rated output	Type	Full - load data					Starting data		Breakdown torque ratio	Starting capacitor	Permanent capacitor	Moment of inertia	Weight approx.
		Speed	Current I_N	Torque M_N	Power factor	Eff. η	Current ratio	Torque ratio		330 V	400 V	J	B3
kW		min^{-1}	A	Nm	Cos φ	%	I_A/I_N	M_A/M_N	M_K/M_N	µF	µF	kgm^2	kg
2 pole (3000 min^{-1})													
0,18	MSD 63 2a	2860	1,3	0,60	0,94	64	5,1	2,3	2,4	21-25	8	0,00012	4,5
0,25	MSD 63 2b	2870	1,6	0,83	0,98	70	4,9	2,1	2,2	30-36	10	0,00014	4,9
0,37	MSD 71 2a	2885	2,5	1,22	0,96	67	4,7	2,1	2,2	53-64	15	0,00028	6,2
0,55	MSD 71 2b	2865	3,5	1,83	0,98	70	4,7	2,2	2,3	88-106	20	0,00035	7,2
0,75	MSD 80 2a	2770	5,0	2,59	0,96	68	4,3	1,8	1,9	88-106	30	0,00056	9,4
1,1	MSD 80 2b	2770	7,0	3,79	0,95	72	4,6	1,9	2,0	130-156	35	0,00070	10,9
1,5	MSD 90 S 2	2820	9,8	5,08	0,91	73	5,4	2,0	2,0	233-280/250V	40	0,00113	13,8
2,2	MSD 90 L 2	2800	13,5	7,50	0,95	75	4,6	1,7	1,7	233-280/250V	50	0,00141	16,1
3	MSD 100 L 2	2850	17,7	10,05	0,97	76	5,3	2,1	2,2	233-280/250V	60	0,00260	20,6
4	MSD 112 M 2	2885	22,0	13,24	0,93	85	5,1	2,1	2,2	233-280/250V	60	0,00410	26,9
4 pole (1500 min^{-1})													
0,12	MSD 63 4a	1430	1,1	0,80	0,91	52	4,0	1,9	2,1	21-25	8	0,00019	4,4
0,18	MSD 63 4b	1390	1,5	1,24	0,93	56	3,6	1,8	1,8	30-36	10	0,00023	4,9
0,25	MSD 71 4a	1425	1,8	1,68	0,93	65	4,5	2,3	2,1	36-43	10	0,00048	6,4
0,37	MSD 71 4b	1435	2,6	2,46	0,91	68	3,8	2,0	1,9	36-43	15	0,00056	6,9
0,55	MSD 80 4a	1410	3,3	3,73	0,97	75	4,5	2,2	1,7	88-106	20	0,00092	9,1
0,75	MSD 80 4b	1405	4,6	5,10	0,98	72	4,5	2,5	1,8	108-130	30	0,00123	10,8
1,1	MSD 90 S 4	1410	7,1	7,45	0,96	70	4,8	2,4	1,9	145-174	35	0,00209	13,8
1,5	MSD 90 L 4	1410	9,3	10,16	0,96	73	4,7	2,7	1,8	161-193	50	0,00265	16,3
2,2	MSD 100 L 4a	1425	13,4	14,74	0,93	77	4,6	2,3	1,8	233-280/250V	60	0,00440	21,5
3	MSD 100 L 4b	1425	19,0	20,11	0,86	80	4,0	1,7	1,7	233-280/250V	60	0,00510	23,7

DIMENSIONS

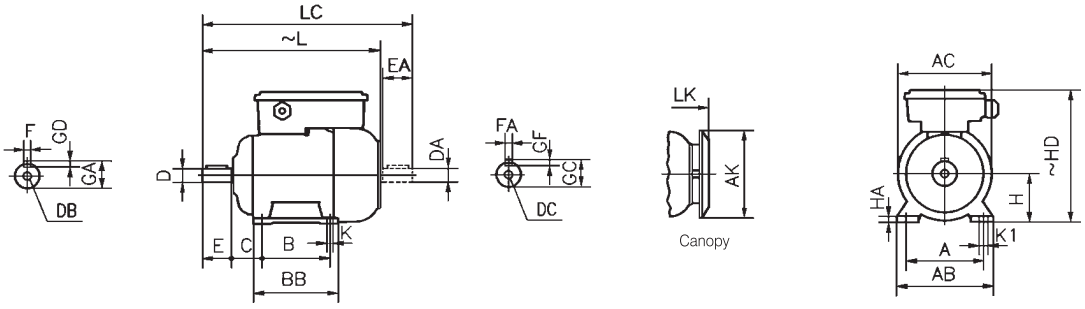

FOOT MOUNTED MOTORS - B3, B6, B7, B8, B15, V5, V6

Frame size	Number of pole	H	HD 1) ~	HD 2) ~	HA	A	AB	Ø AC	ØAK	K	K1	B	BB	L ~	LC	LK ~	C	E EA	DB 3) DC	ØD ØDA	GA GC	FXGD FAXGF
63	2-4	63	201	189	10	100	125	121	116	7	11	80	103	215	242	245	40	23	M4	11	12.5	4X4
71	2-4	71	208	196	10	112	140	138	116	7	11	90	108	247	282	277	45	30	M5	14	16	5X5
80	2-4	80	224	212	10	125	160	156	150	10	15	100	125	278	323	308	50	40	M6	19	21.5	6X6
90 S	2-4	90	242	230	12	140	180	176	150	10	15	100	130	308	363	338	56	50	M8	24	27	8X7
90 L												125	155	333	388	363						
100 L	2-4	100	271	259	13	160	200	194	188	12	18	140	175	375	441	410	63	60	M10	28	31	8X7
112 M	2	112	294	-	13	190	230	218	188	12	18	140	175	392	458	432	70	60	M10	28	31	8X7
Tolerances		-0.5																		j6		

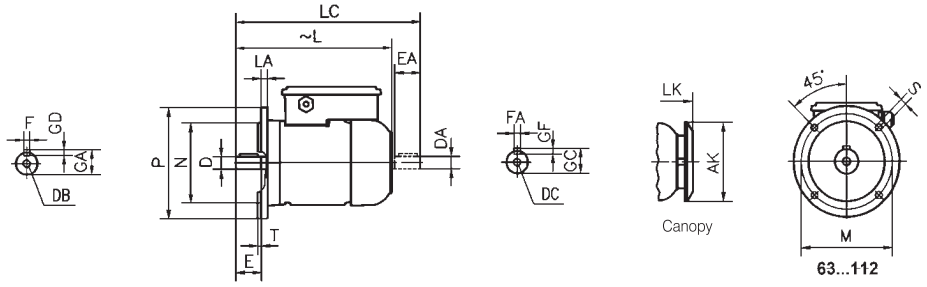

FLANGED MOTORS (FORM "A" - DIN EN 50 347) - B5, V1, V3

Note: The seating face of the flanges lies in the same plane as the shoulder on the shaft.

Frame size	Number of pole	Flange No.	ØM	ØN	ØP	Clearance hole No.	Clearance hole ØS	T	LA	AD 1) ~	AD 2) ~	ØAK	L ~	LC	LK ~	E EA	DB 3) DC	ØD ØDA	GA GC	FXGD FAXGF
63	2-4	FF115	115	95	140	4	10	3	10	138	126	116	215	242	245	23	M4	11	12.5	4X4
71	2-4	FF130	130	110	160	4	10	3.5	10	137	125	116	247	282	277	30	M5	14	16	5X5
80	2-4	FF165	165	130	200	4	12	3.5	12	144	132	150	278	323	308	40	M6	19	21.5	6X6
90 S	2-4	FF165	165	130	200	4	12	3.5	12	152	140	150	308	363	338	50	M8	24	27	8X7
90 L													333	388	363					
100 L	2-4	FF215	215	180	250	4	14.5	4	15	171	159	188	375	441	410	60	M10	28	31	8X7
112 M	2	FF215	215	180	250	4	14.5	4	15	182	-	188	392	458	432	60	M10	28	31	8X7
Tolerances				j6														j6		

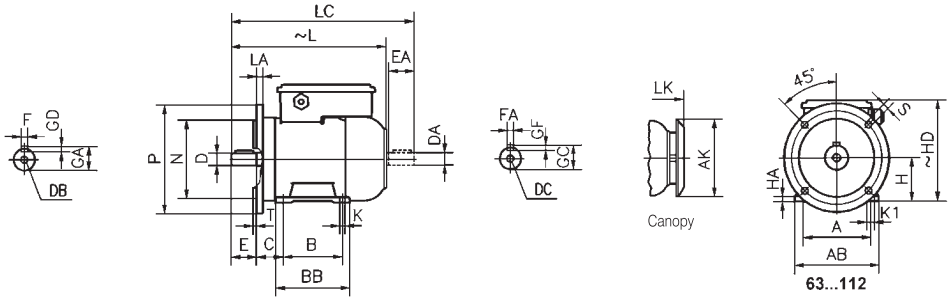

FOOT AND FLANGED MOTORS (FORM "A" - DIN EN 50 347) - B35

Note: The seating face of the flange lies in the same plane as the shoulder on the shaft.

Frame size	Number of pole	H	HD 1) ~	HD 2) ~	HA	A	AB	ØAK	K	K1	B	BB	Flange	ØM	ØN	ØN	No	ØS	T	LA	L ~	LC	LK ~	C	E EA	DB 3) DC	ØD ØDA	GA GC	FXGD FAXGF
63	2-4	63	201	189	10	100	125	116	7	11	80	103	FF115	115	95	140	4	10	3	10	215	242	245	40	23	M4	11	12.5	4X4
71	2-4	71	208	196	10	112	140	116	7	11	90	108	FF130	130	110	160	4	10	3.5	10	247	282	277	45	30	M5	14	16	5X5
80	2-4	80	224	212	10	125	160	150	10	15	100	125	FF165	165	130	200	4	12	3.5	12	278	323	308	50	40	M6	19	21.5	6X6
90 S	2-4	90	242	230	12	140	180	150	10	15	100	130	FF165	165	130	200	4	12	3.5	12	308	363	338	56	50	M8	24	27	8X7
90 L																					333	388	363						
100 L	2-4	100	271	259	13	160	200	188	12	18	140	175	FF215	215	180	250	4	14.5	4	15	375	441	410	63	60	M10	28	31	8X7
112 M	2	112	294	-	13	190	230	188	12	18	140	175	FF215	215	180	250	4	14.5	4	15	392	458	432	70	60	M10	28	31	8X7
Tolerances		-0.5													j6												j6		

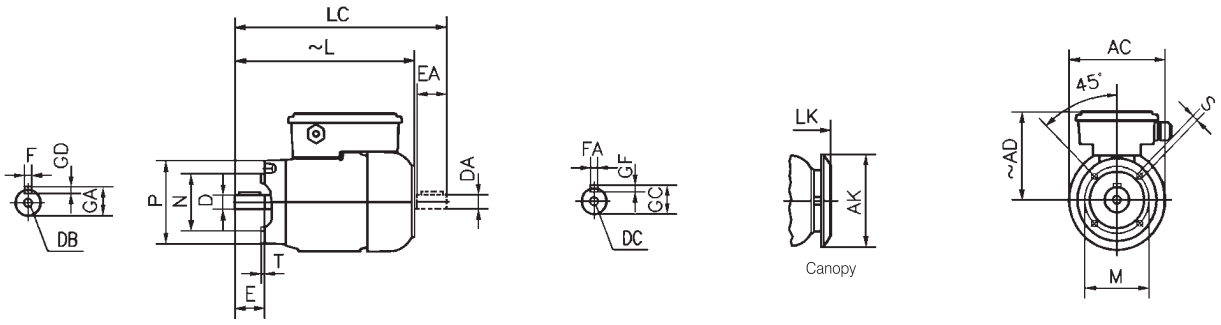

FLANGED MOTORS (FORM "C" - DIN EN 50 347) - B14, V18, V19

Note: The seating face of the flange lies in the same plane as the shoulder on the shaft.

Frame size	Number of pole	Foot mounted motor dimensions : Mounting arrangements B3, B6, B7, B8, B15, V5, V6																		
		Flange No.	ØM	ØN	ØP	S	T	LS	ØAC	ØAK	AD 1) ~	AD 2) ~	L ~	LC	LK ~	E EA	DB 3) DC	ØD ØDA	GA GC	FXGD FAXGF
63	2-4	FT 75	75	60	90	M 5	2.5	10	121	116	138	126	215	242	245	23	M 4	11	12.5	4x4
		FT100	100	80	120	M 6	3	12												
71	2-4	FT 85	85	70	105	M 6	2.5	12	138	116	137	125	247	282	277	30	M 5	14	16	5x5
		FT115	115	95	140	M 8	3	16	-											
80	2-4	FT100	100	80	120	M 6	3	12	156	150	144	132	278	323	308	40	M 6	19	21.5	6x6
		FT130	130	110	160	M 8	3.5	16	-											
90 S	2-4	FT115	115	95	140	M 8	3	16	176	150	152	140	308	363	338	50	M 8	24	27	8x7
		FT130	130	110	160		3.5													
90 L	2-4	FT115	115	95	140		3						333	415	363					
		FT130	130	110	160		3.5													
100 L	2-4	FT130	130	110	160	M 8	3.5	16	194	188	171	159	375	441	415	60	M10	28	31	8x7
		FT165	165	130	200	M10		20	-											
112 M	2-4	FT130	130	110	160	M 8	3.5	16	218	188	182	-	392	458	432	60	M10	28	31	8x7
		FT165	165	130	200	M10		12												
Tolerances				j6														j6		

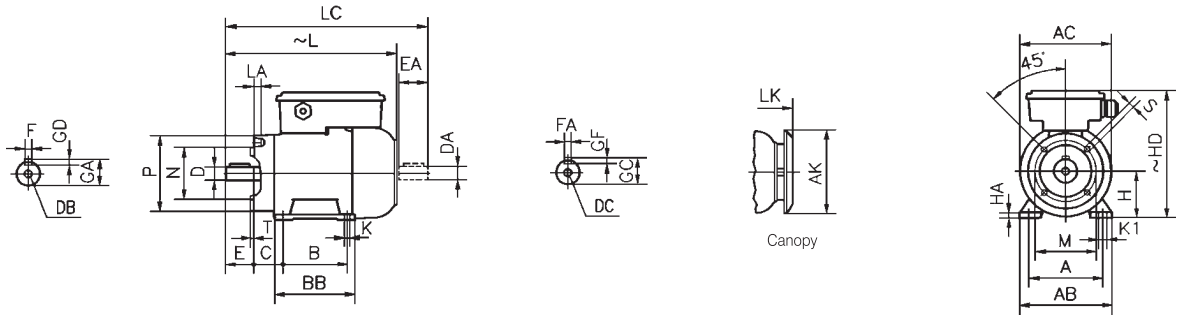

FOOT AND FLANGED MOTORS (FORM "C" - DIN EN 50 347) - B34

Note: The seating face of the flange lies in the same plane as the shoulder on the shaft.

Frame size	Number of pole	Foot mounted motor dimensions : Mounting arrangements B3, B6, B7, B8, B15, V5, V6																											
		H	HD 1) ~	HD 2) ~	HA	A	AB	ØAC	ØAK	ØK	K1	B	BB	Flange No.	LS	MØ	ØN	ØP	S	T	L ~	LC	LK ~	C	E EA	DB 3) DC	ØD ØDA	GA GC	FXGD FAXGF
63	2-4	63	201	189	10	100	125	121	116	7	11	80	103	FT 75	10	75	60	90	M 5	2.5	215	245	245	40	23	M 4	11	12.5	4x4
														FT100	12	100	80	120	M 6	3									
71	2-4	71	208	196	10	112	140	138	116	7	11	90	108	FT 85	12	85	70	105	M 6	2.5	247	277	277	45	30	M 5	14	16	5x5
								-						FT115	16	115	95	140	M 8	3									
80	2-4	80	224	212	10	125	160	156	150	10	15	100	125	FT100	12	100	80	120	M 6	3	278	308	308	50	40	M 6	19	21.5	6x6
								-						FT130	16	130	110	160	M 8	3.5									
90 S	2-4	90	242	230	12	140	180	176	150	10	15	100	130	FT115	16	115	95	140	M 8	3	308	338	338	56	50	M 8	24	27	8x7
														FT130		130	110	160		3.5									
90 L	2-4											125	155	FT115		115	95	140		3	333	363	363						
														FT130		130	110	160		3.5									
100 L	2-4	100	271	259	13	160	200	194	188	12	18	140	175	FT130	16	130	110	160	M 8	3.5	375	415	415	63	60	M10	28	31	8x7
								-						FT165	20	165	130	200	M10										
112 M	2-4	112	294	-	13	190	230	218	188	12	18	140	175	FT130	16	130	110	160	M 8	3.5	392	432	432	70	60	M10	28	31	8x7
														FT165	12	165	130	200	M10										
Tolerances		-0.5															j6										j6		

1) 2) 3)

SPARES

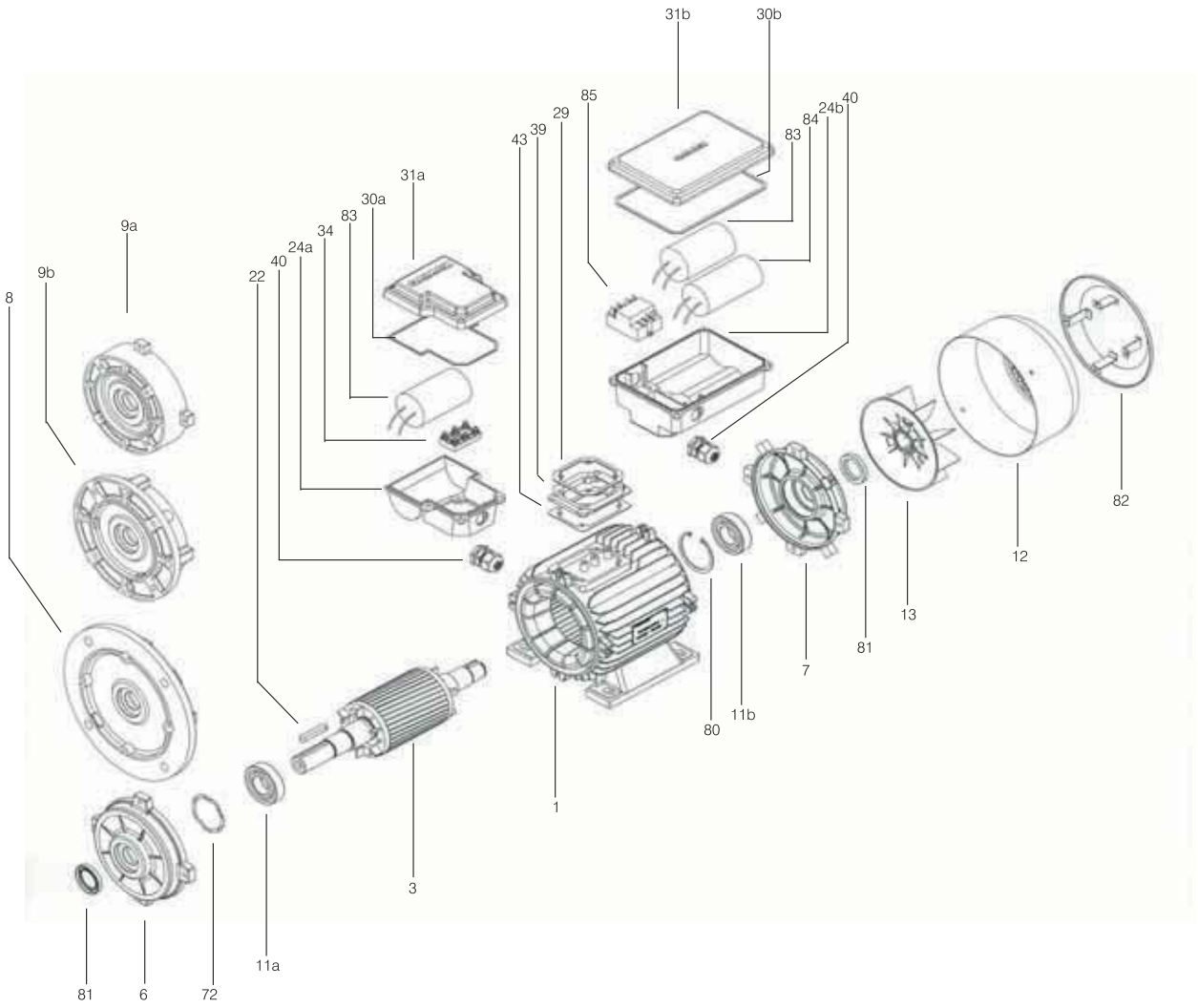

1 Stator complete with winding, varnished and fitted in the frame
3 Rotor complete with shaft, finish machined and balanced (Excluding keys)
6 End Shield Drive-end B3 mounting
7 End Shield Non drive end
8 D-Flange (Form A-"FF") - Plase state flange number
9a C-Face Flange (Form C-"FT") - Please state flange number
9b C-Face Flange (Form C-"FT", big type) - Please state flange number
11a Drive end bearing
11b Non Drive end bearing
12 Fan cover
13 Fan
22 Shaft key
30a Terminal box to lid gasket - Permanent split capacitor design
31a Terminal box lid - Permanent sylit capacitor design
24a Terminal box - Permanent split capacitor design
34 Terminal board complete with terminal links, nuts and washers
30b Terminal box to lid gasket - Capacitor start / capacitor run design
31b Terminal box lid - Capacitor start / capacitor run design
24b Terminal box - Capacitor start / capacitor run design
29 Adaptor plate to terminal box gasket (63 and 100-112)
39 Adaptor plate (63 and 100-112)
40 Cable gland
43 Terminal box / Adaptor plate to frame gasket (63...112)
72 Corrugated disc spring for preloading ball-bearing
80 Internal circlip for retaining ball bearing at Non-Drive end shield (special arrangement on request)
81 V-Ring (Oil seal)
82 Canopy
83 Permanent capacitor
84 Starting capacitor
85 Electronic start relay - Capacitor start / capacitor run design

SHADED POLE MOTORS

The shaded pole FAN MOTORS are designed, manufactured and controlled according to VDE recommendations and marked with CE mark. The totally enclosed FAN MOTORS are protected against dust and humidity as per IP 42 protection class. The end - shields with thin ribs are pressure - die - cast aluminium alloy, help cooling of motor and bearings. The permanently self lubricating and aligning sintered sleeve bearings which are preferred for horizontal mounting only, provide noise and maintenance free long working years at any ambient temperature ranging from -30°C to +40°C. Ball bearing version is available on request for both vertical and horitonzal mounting positions, in which case K suffix in type coding which stands for sleeve bearing will replace with R to identify ball bearing version (e.g. GF 8413R).

Fans of 200, 250 and 300 mm diameter are injection mould, fibreglass reinforced high grade polyamide.

USE : Specially designed for ventilators, condensing units and evaporators.

Single phase, 230 V - 50/60 Hz

Totally enclosed, IP 42
Insulation Class : "F" (155°C)
Temp. Rise : Class "B" (80K)

2 pole - 3000 min^{-1}
Air over motor & ventilated

TYPE	Hz	RATED INPUT W	RATED OUTPUT W	FULL LOAD CURRENT (I_N) A	FULL LOAD SPEED min^{-1}
GF8213K	50	49	5	0,36	2600
	60	42	5	0,31	3120
GF8218K	50	56	11	0,43	2620
	60	48	11	0,37	3140
GF8225K	50	76	19	0,56	2650
	60	65	19	0,49	3180
GF8232K	50	114	25	0,90	2600
	60	98	25	0,78	3120
GF8238K	50	120	30	0,95	2600
	60	104	30	0,82	3120

4 pole - 1500 min^{-1}
Air over motor & ventilated

TYPE	Hz	RATED INPUT W	RATED OUTPUT W	FULL LOAD CURRENT (I_N) A	FULL LOAD SPEED min^{-1}
GF8413K	50	36	5	0,22	1300
	60	31	5	0,19	1555
GF8418K	50	39	7,5	0,25	1310
	60	33	7,5	0,22	1565
GF8425K	50	58	13	0,40	1305
	60	49	13	0,35	1560
GF8432K	50	85	19	0,59	1310
	60	73	19	0,51	1565
GF8438K	50	92	24	0,64	1305
	60	81	24	0,56	1560

4 pole - 1500 min^{-1}
Impedance protection against locked rotor (max 150K)

LGF8413K	50	36	5	0,22	1305
	60	31	5	0,19	1560
LGF8418K	50	34	7	0,22	1310
	60	27	7	0,18	1565
LGF8425K	50	41	10	0,28	1300
	60	32	10	0,22	1555
LGF8432K	50	46	13	0,32	1330
	60	39	13	0,27	1590
LGF8438K	50	50	16	0,34	1300
	60	44	16	0,29	1555

4 pole - 1500 min^{-1}
Non ventilated

NGF8413K	50	23,6	3	0,15	1320
	60	21	3	0,13	1580
NGF8418K	50	27,4	5	0,17	1310
	60	24	5	0,15	1565
NGF8425K	50	36,5	7	0,25	1320
	60	31	7	0,21	1580
NGF8432K	50	38	9	0,26	1300
	60	33	9	0,22	1555
NGF8438K	50	42	12	0,29	1300
	60	37	12	0,26	1555

DIMENSIONS

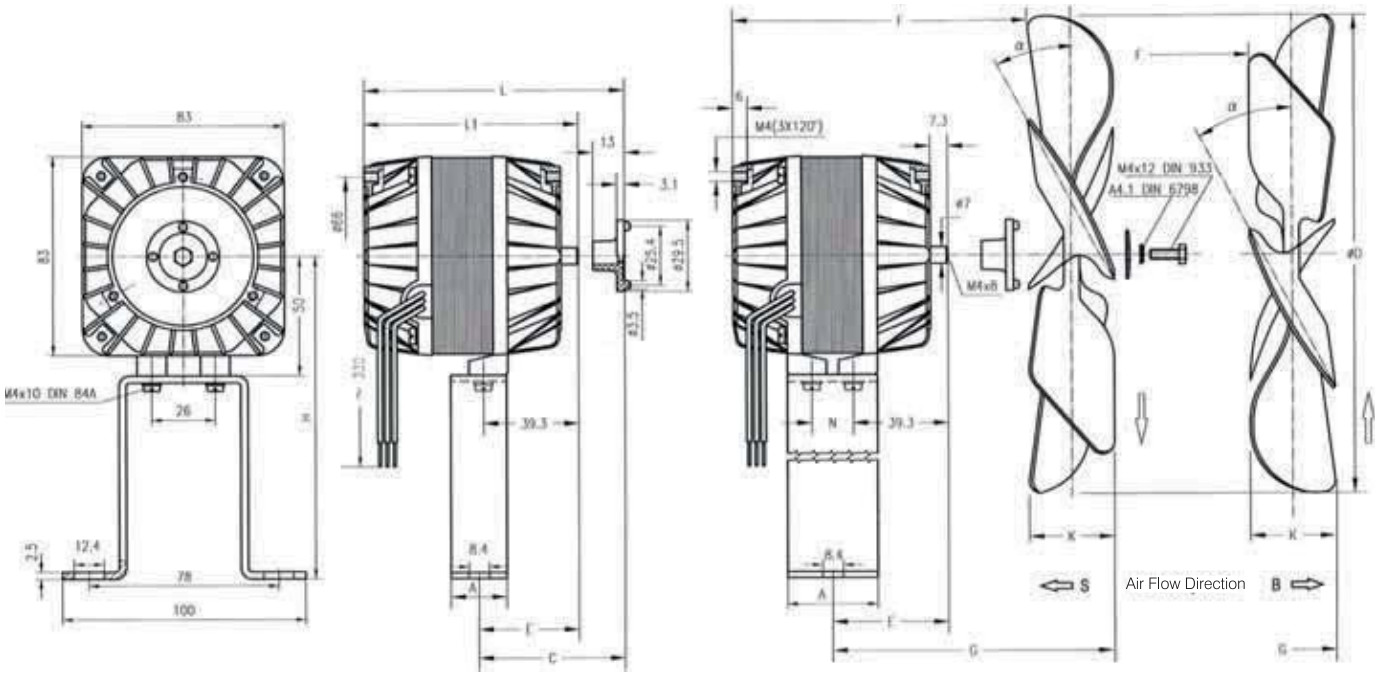

TYPE	L	L_1	A	E	C	H	N	F	G	K	DØ	α
GF8413K	78,8	76,3	23	41,3	43,8	105 / 135	-	62,3	97,3	35	200	28
								64,1	96,1	32	250	22
GF8418K	83,8	81,3						71,1	99,1	28	300	16
GF8425K	90,8	88,3	37	47,8	50,3	158	17	76,3	110,3	32	350	16,5
GF8432K	97,8	95,3	50	54,8	57,5		24	-	-	-	-	-
GF8438K	103,8	101,3					30					

All dimensions in mm

The dimensions of 2 pole motors are identical with 4 pole motors, however please consult GAMAK for fan dimensions as it will be different than 4 pole fan dimensions.

DEFINITE PURPOSE MOTORS

	Page
- Brake Motors	83-84
- Smoke Extraction Motors	85...90
- Marine Motors	91
- Special Application Motors	92

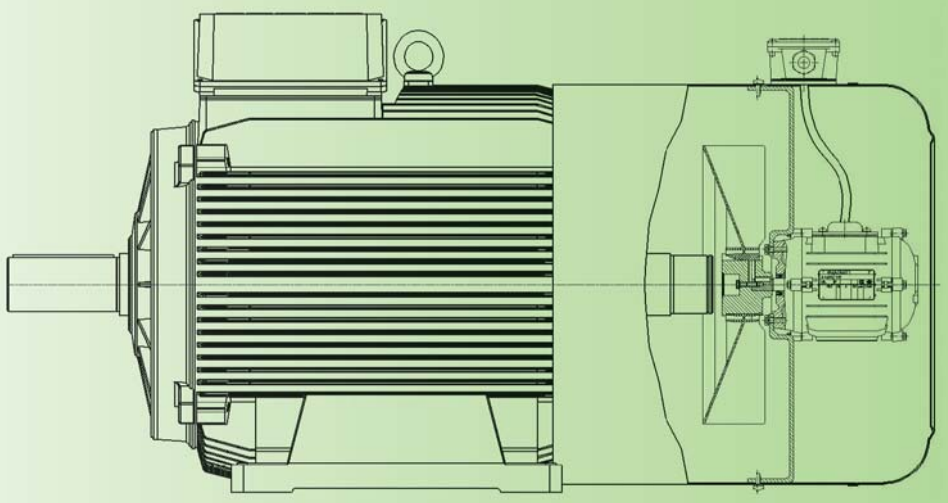

BRAKE MOTORS

Brakes can be fitted to a wide variety of motors manufactured by GAMAK. Electromagnetic disc brakes fitted at the non-drive end of the motor functions by the action of a set of springs and are released when applying voltage to the brake coil. The electro-magnetic disc brake is powered by either Direct Current through a rectifier located in terminal box or three-phase Alternative Current.

The difference between AC and DC braking is shown at the following diagrams :

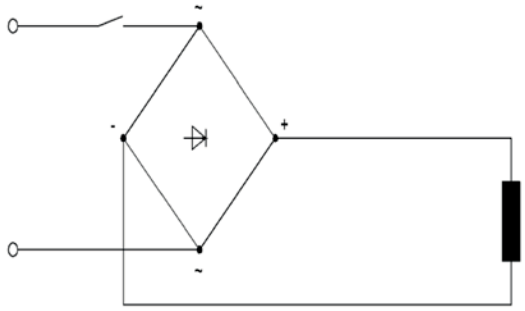

AC BRAKING

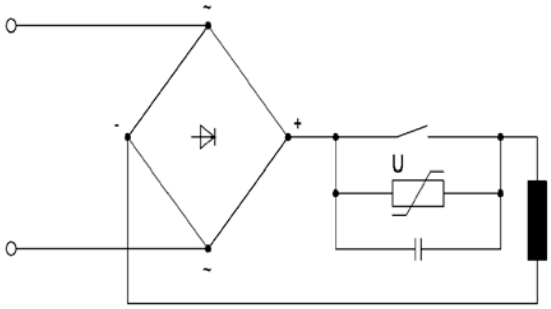

DC BRAKING

- Coils supplied with a.c. may overheat which in turn may cause the pole faces to get deformed and the brake may hum.

- Reaction time of AC brakes are quicker than DC brakes. In case the application requires frequent braking and rapid reaction times, then AC brakes can be used.

- The coils of AC brakes covers more space than DC brakes.

- DC brakes have lower output current.

As standard DC brakes responds the needs of most applications, they are more widely used. A rectifier, when used with the DC brake, changes the AC input current waveform to DC. The standard DC brake coil connection voltages are 24V, 96V, 103V and 205V.

The brake torque determines the stopping time of the load and the holding power of the brake. The brakes can be classified as follows by their torques :

- Standard brake motors
- Low torque brake motors

Standard Brake Motors :

Standard brake motors are designed for applications where a torque between 150% to 200% of full load torque is sufficient.

Brakes should be sized for adequate thermal capacity and to achieve the required stopping time. To ensure selection of the correct brake, for each application, details should be given at the enquiry stage.

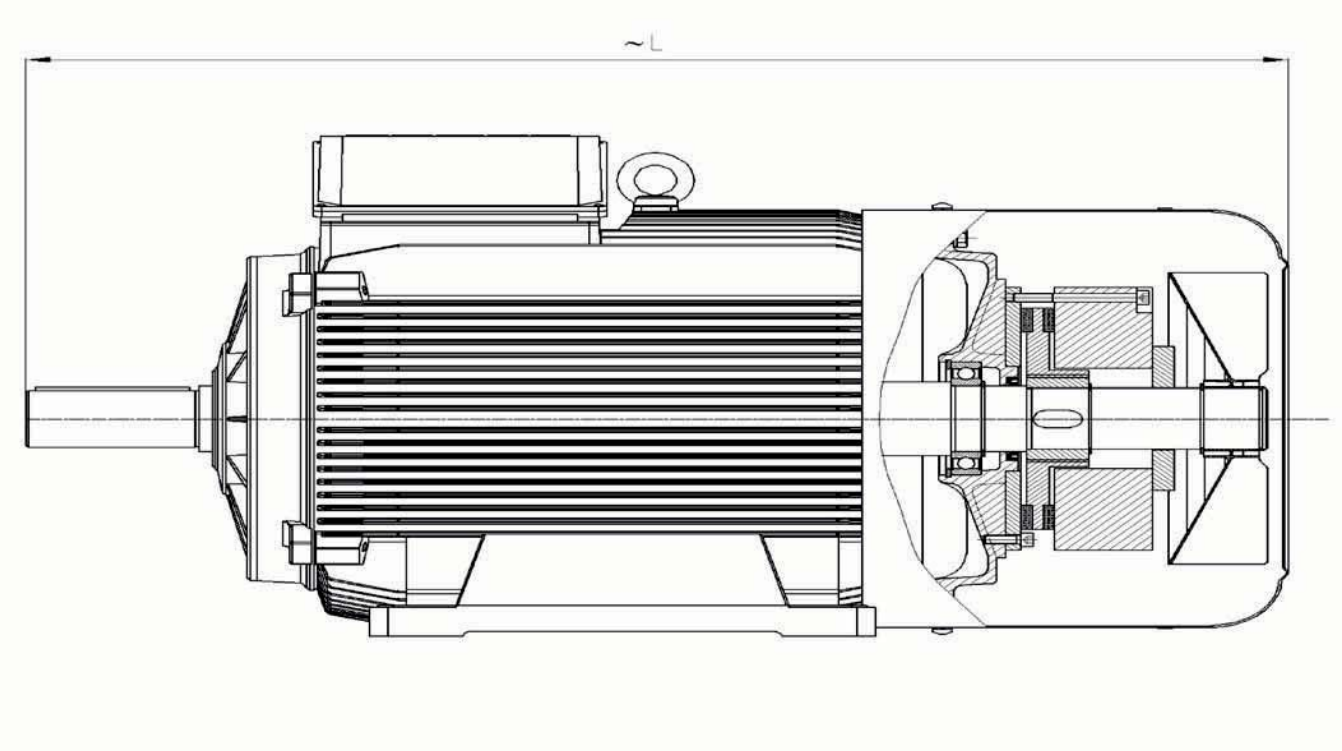

Above drawing shows the mounting of a brake. Overall lengths are given at the tables below :

ALUMINIUM FRAME MOTORS

Frame size		Number of poles	~L mm
63		2-4	273
71		2-4-6-8	299
80		2-4-6-8	332
90	S	2-4-6-8	370
	L		395
100	L	2-4-6-8	446
112	M	2-4-6-8	470
132	S	2-4-6-8	550
	M		588
160	M	2-4-6-8	689
	L		
180	M	2-4-6-8	761
	L		
200	L	2-4-6-8	880

CAST IRON FRAME MOTORS

Frame size		Number of poles	~L mm
132	S	2-4-6-8	588
	M		
160	M	2-4-6-8	689
	L		733
180	M	2-4-6-8	761
	L		799
200	L	2-4-6-8	880
225	S	4-8	925
	M	2	925
		4-6-8	950
250	M	2	1023
		4-6-8	
280	S	2	1098
		4-6-8	

Low Torque DC Brake Motors :

Specially designed for woodworking/cutting machinery and machines requiring long braking periods. Braking torque (M_B) is lower than the nominal torque of the motor (M_N) which provides soft stopping. These brake motors are in compliance with regulation 15 of PUWER 98.

The overall length of these brake motors are the same as standard motors.

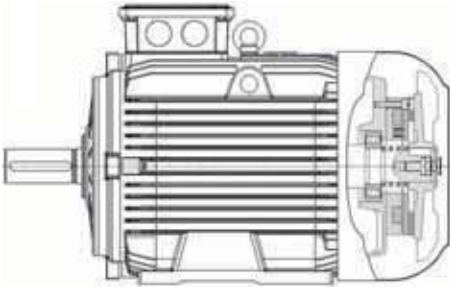

SMOKE EXTRACTION MOTORS

The low-voltage motors with squirrel cage rotors for implementation in automatic smoke and heat extraction units to EN 12101-3 are mainly designed for driving smoke extraction fans.

Smoke extraction motors are installed in a wide variety of building types, including road/rail tunnels, staircases, building complexes and atriums, theatres, industrial buildings and warehouses, enclosed car parks, shopping malls. Their value in facilitating the evacuation of people from buildings, reducing damage and financial loss by preventing smoke logging, reducing the heat stress of components, retarding the spread of fire and allowing fire-fighters to locate the source of fire is firmly established.

Smoke extraction motors are designed to operate in two modes ;

S2 : Once only short time rating for emergency duty. The motor operates for the pre-determined period of time and temperature in case of emergency.
S1 + S2 :Continuous running at normal ambient, plus once only S2 short time rating for emergency duty - Continuous running is for incoming/outgoing air flow under normal conditions ; for example exhausting of gases in road tunnels.

Taking into consideration that S1+S2 dual purpose motors may run S1 continuous operation lifetime, they are designed in accordance with IE2 efficiency class.

Smoke extraction motors are classified according to the temperature and minimum operating time at an emergency event. EN 12101-3 classifies combinations of temperature and time as shown in the table below :

Emergency operation	Temperature (°C)	Minimum operating time (Minute)
F200	200	120
F300	300	60
F400	400	120
F600	600	60
F842	842	30
Special	As specified by the user	As specified by the user

For example, a motor manufactured for an emergency operation of F300, will operate at 300°C for 1 hour when the emergency smoke extraction system is activated. The temperature and time of special class is determined by the user.

Mechanical features :

- Standard smoke extraction motors are supplied as totally enclosed and cooled by the airstream produced by the driven fan (IC418).-TEAO. Smoke extraction motors for use in bifurcated fans will be supplied as Totally Enclosed Fan Cooled (IC411). As standard, smoke extraction motors with IC418 cooling are supplied without terminal boxes but with cover plate and 2m loose leads.
- The motor frames are of cast iron.
- Motors are designed to class “H” insulation and class “B” temperature rise.
- All motors are fitted with thermistors and should be disactivated during emergency operation.

✧ In the event of fire incident, the motor must be replaced with the new one.

RATINGS AND PERFORMANCE

F300 IE2
3-Phase, 400 V, 50 Hz
Duty type : S2+S1
Degree of protection : IP 55
Insulation class : H (180°C)
Temp. Rise : B (80K)

CAST IRON HOUSING

Rated output	Type	Full-load data							Starting data				Breakdown torque ratio	Moment of inertia	Weight approx.
		Speed	Current	Torque	Power Factor	Efficiency η %			Locked-rotor current ratio		Locked-rotor torque ratio				
			I_N	M_N	Cos φ	IEC 60034-2-1:2007			I_A/I_N		M_A/M_N		M_K/M_N	J	B3
kW		min-1	A	Nm		At 4/4	At 3/4	At 1/2	D.O.L.	Y/Δ	D.O.L.	Y/Δ		kgm²	kg
2 pole, 3000 min-1															
0,37	GMD 71 2a	2800	1,05	1,26	0,74	68,9	68,7	66,7	5,0	-	2,4	-	2,6	0,00026	8,9
0,55	GMD 71 2b	2780	1,27	1,89	0,87	71,6	71,3	70,3	4,5	-	2,4	-	2,6	0,00034	10,0
0,75	GM2ED 80 2a	2860	1,60	2,50	0,87	77,8	77,7	74,6	6,2	-	2,5	-	2,9	0,00066	14,0
1,1	GM2ED 80 2b	2900	2,30	3,62	0,84	82,0	81,9	79,1	6,3	-	2,7	-	3,3	0,00080	15,6
1,5	GM2ED 90 S 2	2900	3,40	4,94	0,76	83,0	83,0	81,6	6,3	-	3,1	-	2,5	0,0014	19,8
2,2	GM2ED 90 L 2	2900	4,48	7,24	0,84	84,5	84,5	83,2	6,6	-	2,9	-	3,5	0,0017	22,3
3	GM2ED 100 L 2	2900	6,00	9,9	0,85	85,3	85,3	84,1	7,6	-	3,4	-	4,0	0,0031	30,9
4	GM2ED 112 M 2	2910	7,40	13,1	0,90	86,5	86,5	86,0	7,2	2,3	2,8	0,9	3,0	0,0048	35
5,5	GM2ED 132 S 2a	2930	11	17,9	0,85	873,3	87,3	86,5	7,3	2,4	2,8	0,9	3,5	0,012	51
7,5	GM2ED 132 S 2b	2910	13,6	24,6	0,90	88,5	88,5	87,9	7,2	2,3	3,0	1,0	3,4	0,014	56
11	GM2ED 160 M 2a	2945	19,5	35,7	0,91	89,5	89,5	88,6	8,5	2,7	3,4	1,1	3,6	0,04	105
15	GM2ED 160 M 2b	2945	28,5	48,6	0,85	90,4	90,4	89,7	7,5	2,4	3,0	1,0	3,5	0,041	113
18,5	GM2ED 160 L 2	2950	32,3	59,9	0,91	90,9	90,8	90,1	8,2	2,6	3,0	1,0	3,2	0,051	135
22	GM2ED 180 M 2	2960	38,3	71	0,91	91,3	91,3	90,8	8,2	2,6	3,0	1,0	3,5	0,075	170
30	GM2ED 200 L 2a	2970	52	96	0,91	92,0	92,0	91,2	8,3	2,7	2,7	0,9	3,0	0,13	210
37	GM2ED 200 L 2b	2970	65	119	0,89	92,6	92,6	91,7	8,3	2,7	2,7	0,9	3,0	0,15	240
45	GM2ED 225 M 2	2975	77	144	0,91	92,9	93,0	91,8	8,7	2,8	2,7	0,9	3,1	0,23	343
55	GM2ED 250 M 2	2980	94	176	0,91	93,2	93,7	92,2	8,7	2,8	2,9	0,9	3,0	0,41	445
75	GM2ED 280 S 2	2980	127	240	0,91	93,9	94,1	92,5	8,0	2,6	2,9	0,9	3,2	0,62	585
90	GM2ED 280 M 2	2980	151	288	0,91	94,2	94,2	92,7	8,5	2,7	2,7	0,9	3,0	0,74	645
110	GM2ED 315 S 2	2980	186	353	0,91	94,3	94,3	92,8	8,0	2,6	2,5	0,8	3,0	1,2	742
132	GM2ED 315 M 2a	2980	223	423	0,90	94,6	94,5	92,9	8,0	2,6	2,5	0,8	3,0	1,4	812
160	GM2ED 315 M 2b	2980	266	513	0,92	94,8	94,8	93,4	8,0	2,6	2,5	0,8	3,0	1,5	912

Efficiencies are calculated according to indirect method where the additional load losses are determined from exact measurements at different load points.

RATINGS AND PERFORMANCE

F300 IE2
3-Phase, 400 V, 50 Hz
Duty type : S2+S1
Degree of protection : IP 55
Insulation class : H (180°C)
Temp. Rise : B (80K)

CAST IRON HOUSING

Rated output	Type	Full-load data							Starting data				Breakdown torque ratio	Moment of inertia	Weight approx.
		Speed	Current	Torque	Power Factor	Efficiency η %			Locked-rotor current ratio		Locked-rotor torque ratio				
			I_N	M_N	Cos φ	IEC 60034-2-1:2007			I_A/I_N		M_A/M_N		M_K/M_N	J	B3
kW		min⁻¹	A	Nm		At 4/4	At 3/4	At 1/2	D.O.L.	Y/Δ	D.O.L.	Y/Δ		kgm²	kg
4 pole, 1500 min⁻¹															
0,25	GMD 71 4a	1380	0,81	1,73	0,72	61,9	61,8	58,2	2,9	-	1,8	-	2,2	0,00040	8,9
0,37	GMD 71 4b	1390	1,15	2,54	0,68	68,1	68,1	67,1	3,7	-	2,2	-	2,5	0,00054	9,8
0,55	GMD 80 4a	1365	1,60	3,85	0,72	69,1	69,0	68,2	3,5	-	1,9	-	2,0	0,00083	12,7
0,75	GM2ED 80 4b	1410	2,1	5,08	0,65	79,6	79,6	77,6	5,0	-	2,6	-	2,8	0,0014	15,6
1,1	GM2ED 90 S 4	1430	2,60	7,35	0,75	82,0	82,0	80,5	5,5	-	2,3	-	3,3	0,0025	20,7
1,5	GM2ED 90 L 4	1430	3,50	10,02	0,75	83,0	83,0	81,5	5,9	-	3,3	-	3,5	0,0033	24
2,2	GM2ED 100 L 4a	1435	5	14,6	0,75	84,5	84,6	82,5	5,9	-	2,9	-	3,4	0,0052	31,6
3	GM2ED 100 L 4b	1435	6,6	20	0,77	85,5	85,7	84,0	6,2	-	2,9	-	3,4	0,0068	38
4	GM2ED 112 M 4	1455	8,2	26,3	0,81	86,7	86,8	85,3	6,6	2,1	2,5	0,8	3,3	0,012	49
5,5	GM2ED 132 S 4	1465	11,2	35,9	0,81	87,9	88,0	87,2	7,0	2,3	2,8	0,9	3,5	0,026	58
7,5	GM2ED 132 M 4	1465	15,4	48,9	0,79	89,0	89,1	88,1	7,1	2,3	2,7	0,9	3,4	0,032	69
11	GM2ED 160 M 4	1470	21,0	71,5	0,84	90,0	90,1	89,3	6,9	2,2	2,8	0,9	3,1	0,072	130
15	GM2ED 160 L 4	1470	29,3	97,4	0,82	90,6	90,7	89,7	7,5	2,4	2,6	0,8	3,5	0,092	141
18,5	GM2ED 180 M 4	1475	34,5	120	0,85	91,3	91,4	90,4	7,7	2,5	3,2	1,0	3,4	0,15	180
22	GM2ED 180 L 4	1475	42,5	142	0,82	91,7	91,7	90,6	8,3	2,7	3,7	1,2	3,8	0,17	190
30	GM2ED 200 L 4	1475	55	194	0,85	92,5	92,6	92,1	8,0	2,6	3,1	1,0	3,6	0,23	227
37	GM2ED 225 S 4	1475	67	240	0,86	92,7	92,7	92,2	7,2	2,3	3,0	1,0	3,0	0,35	314
45	GM2ED 225 M 4	1475	80	291	0,87	93,3	93,3	92,4	7,3	2,4	3,0	1,0	3,0	0,44	360
55	GM2ED 250 M 4	1480	96	355	0,88	93,7	93,8	93,2	7,6	2,5	3,1	1,0	2,9	0,78	445
75	GM2ED 280 S 4	1485	133	482	0,87	94,0	94,1	93,4	7,9	2,5	2,6	0,8	2,8	1,11	605
90	GM2ED 280 M 4	1485	158	579	0,87	94,3	94,5	93,8	7,4	2,4	2,9	0,9	3,0	1,32	665
110	GM2ED 315 S 4	1485	195	707	0,86	94,5	94,5	93,8	7,0	2,3	2,3	0,7	2,6	2,1	784
132	GM2ED 315 M 4a	1485	235	849	0,86	94,7	94,5	93,8	7,0	2,3	2,3	0,7	2,6	2,5	861
160	GM2ED 315 M 4b	1485	280	1029	0,87	95,0	94,9	94,0	7,0	2,3	2,3	0,7	2,6	2,7	882
6 pole, 1000 min⁻¹															
0,18	GMD 71 6a	915	0,61	1,88	0,68	63,0	62,9	58,7	3,2	-	1,7	-	2,1	0,00064	9,0
0,25	GMD 71 6b	915	0,83	2,61	0,68	63,8	63,7	59,6	3,2	-	1,7	-	2,1	0,00086	9,7
0,37	GMD 80 6a	910	1,1	3,88	0,67	72,9	72,8	70,1	3,6	-	2,1	-	2,4	0,0017	13,3
0,55	GMD 80 6b	890	1,5	5,90	0,75	70,4	70,3	68,2	3,5	-	1,9	-	2,0	0,0022	14,6
0,75	GM2ED 90 S 6	920	2	7,79	0,71	75,9	75,9	72,4	4,0	-	2,2	-	2,4	0,0038	19,6
1,1	GM2ED 90 L 6	940	2,9	11,18	0,70	78,1	78,1	75,1	4,0	-	2,2	-	2,4	0,0045	21,5
1,5	GM2ED 100 L 6	955	3,6	15	0,75	79,8	79,7	76,4	4,5	-	2,2	-	2,4	0,011	33,6
2,2	GM2ED 112 M 6	960	5,4	21,9	0,72	81,8	81,7	78,5	4,7	1,5	2,2	0,7	2,5	0,016	42,5
3	GM2ED 132 S 6	960	6,9	29,8	0,86	83,3	83,2	80,4	5,0	1,6	2,2	0,7	2,6	0,028	56
4	GM2ED 132 M 6a	960	9	39,8	0,84	84,6	84,5	81,6	5,0	1,6	2,2	0,7	2,6	0,043	62
5,5	GM2ED 132 M 6b	960	12,3	54,7	0,84	86,0	86,0	83,1	5,0	1,6	2,2	0,7	2,6	0,06	75
7,5	GM2ED 160 M 6	960	15	74,6	0,88	87,2	87,2	84,5	6,5	2,1	2,5	0,8	3,0	0,11	126
11	GM2ED 160 L 6	965	22	108,9	0,87	88,7	88,7	85,7	6,5	2,1	2,5	0,8	3,0	0,14	146
15	GM2ED 180 L 6	965	29	148	0,86	89,7	89,7	86,8	6,5	2,1	2,4	0,8	3,0	0,20	189
18,5	GM2ED 200 L 6a	975	36,5	181	0,88	90,4	90,4	87,7	7,0	2,3	2,5	0,8	3,0	0,26	222
22	GM2ED 200 L 6b	975	43	215	0,88	91,1	91,1	88,4	7,0	2,3	2,5	0,8	3,0	0,32	245
30	GM2ED 225 M 6	980	58	292	0,88	91,7	91,7	89,6	7,0	2,3	3,0	1,0	2,6	0,69	325
37	GM2ED 250 M 6	985	69	359	0,88	92,2	92,2	90,1	7,0	2,3	3,0	1,0	2,6	0,99	440
45	GM2ED 280 S 6	990	92	434	0,88	92,7	92,7	90,9	7,0	2,3	3,3	1,1	2,6	1,5	553
55	GM2ED 280 M 6	990	107	531	0,88	93,1	93,1	91,5	7,0	2,3	3,3	1,1	2,6	1,6	578
75	GM2ED 315 S 6	990	140	723	0,87	93,7	93,7	92,4	7,0	2,3	2,5	0,8	3,0	2,5	727
90	GM2ED 315 M 6a	990	166	868	0,87	94,0	94,0	92,6	7,0	2,3	2,5	0,8	3,0	3,1	805
110	GM2ED 315 M 6b	990	198	1061	0,88	94,3	94,3	92,7	7,0	2,3	2,5	0,8	3,0	3,2	860

Efficiencies are calculated according to indirect method where the additional load losses are determined from exact measurements at different load points.

Two Speed Smoke Extraction Motors
Suitable for applications where torque rises with the square of speed
Single winding - Dahlander connection Y/YY

F300 3-Phase, 400 V, 50 Hz
Duty type : S2+S1
Degree of protection : IP 55
Insulation class : H (180ºC)
Temp. Rise : B (80K)

Rated output	Type	Full-load data					Starting data		Breakdown torque ratio	Moment of inertia	Weight approx.
		Speed	Current	Torque	Power Factor	Efficiency η %	Locked-rotor current-ratio	Locked-rotor torque ratio			
			I_N	M_N	Cos φ		I_A/I_N	M_A/M_N	M_K/M_N	J	B3
kW		min-1	A	Nm		IEC 60034-2-1:2007 4/4	D.O.L.	D.O.L.		kgm²	kg
4/2 pole, 1500/3000 min-1 - CAST IRON HOUSING											
0,08/0,37	V.GMD 71 4/2a	1380/2800	0,32/1,1	0,55/1,26	0,69/0,84	50,5/56,5	2,5/3,5	1,4/1,5	1,6/1,7	0,00026	7,3
0,12/0,5	V.GMD 71 4/2b	1380/2800	0,45/1,4	0,83/1,71	0,73/0,81	51,5/62,3	3,0/3,8	1,6/1,8	1,8/2,0	0,00034	7,7
0,17/0,75	V.GMD 80 4/2a	1400/2790	0,50/1,7	1,2/2,6	0,77/0,91	62,2/68,3	3,5/4,1	1,6/1,7	1,9/1,9	0,00053	10,3
0,25/1,0	V.GMD 80 4/2b	1410/2810	0,70/2,2	1,7/3,4	0,75/0,98	67,1/65,4	3,3/3,6	1,4/1,6	1,7/1,9	0,00066	11,5
0,33/1,3	V.GMD 90 S 4/2	1425/2860	0,90/2,8	2,2/4,3	0,74/0,87	70,1/75,2	3,7/4,4	1,6/1,8	2,0/1,9	0,0011	13,8
0,5/2,0	V.GMD 90 L 4/2	1415/2835	1,2/4,2	3,4/6,7	0,78/0,88	75,0/76,2	4,5/6,0	2,0/1,8	2,4/2,5	0,0014	16,1
0,66/2,7	V.GMD 100 L 4/2	1430/2845	1,5/5,2	4,4/9,1	0,81/0,95	76,0/77,2	4,9/4,7	1,7/1,9	2,3/2,1	0,0024	21,9
0,9/3,6	V.GMD 112 M 4/2	1440/2870	2/7,3	6,0/12	0,83/0,89	76,1/78,3	5,5/6,0	1,8/2,0	2,6/2,5	0,0039	26
1,25/5	V.GMD 132 S 4/2a	1440/2860	3/9,8	8,3/16,7	0,81/0,93	75,2/77,3	4,3/4,9	1,8/2,1	2,1/2,2	0,0090	45
1,7/6,5	V.GMD 132 S 4/2b	1440/2900	3,6/12,5	11,3/21,4	0,84/0,89	79,1/82,3	5,8/6,8	2,3/2,3	2,5/2,7	0,012	52
2,5/10	V.GMD 160 M 4/2a	1450/2910	5,3/19,5	16/33	0,84/0,90	79,2/80,4	5,0/5,3	2,1/2,5	2,2/2,7	0,026	94
3,3/13	V.GMD 160 M 4/2b	1460/2930	6,7/24	22/42	0,85/0,91	82,2/84,4	6,8/8,6	2,2/2,5	2,9/3,3	0,034	105
4,4/17	V.GMD 160 L 4/2	1460/2930	8,6/32	29/55	0,87/0,89	83,2/84,4	6,9/8,8	2,4/2,6	2,7/3,0	0,041	118
5/20	V.GMD 180 M 4/2	1475/2940	10/37	32/65	0,87/0,90	81,3/85,4	6,7/7,7	2,6/2,4	2,7/2,7	0,060	150
7,5/28	V.GMD 200 L 4/2a	1470/2960	15/50	49/90	0,85/0,92	83,3/86,5	6,4/7,5	2,3/2,1	2,3/2,4	0,10	215
8,5/33	V.GMD 200 L 4/2b	1470/2950	16/59	55/107	0,87/0,90	86,2/88,5	6,8/7,6	2,1/1,9	2,2/2,1	0,13	235
10/40	V.GMD 225 M 4/2	1470/2955	20/72	65/129	0,82/0,91	86,3/86,5	5,5/6,5	2,0/1,8	2,1/2,4	0,19	315
12,5/48	V.GMD 250 M 4/2	1480/2965	25/86	81/155	0,81/0,90	87,3/88,5	5,7/7,5	2,0/2,1	2,1/2,4	0,32	385
17/66	V.GMD 280 S 4/2	1480/2970	33/115	110/212	0,83/0,91	88,3/89,6	6,2//7,9	2,0/2,1	2,2/2,6	0,50	560
20/78	V.GMD 280 M 4/2	1480/2970	38/133	129/251	0,84/0,93	88,4/89,6	6,7/8,2	2,0/2,1	2,3/2,7	0,62	595
25/100	V.GMD 315 S 4/2	1485/2975	48/172	161/321	0,84/0,92	88,4/89,7	6,5/7,9	1,4/1,7	2,4/2,7	0,96	720
30/120	V.GMD 315 M 4/2a	1490/2980	58/205	192/385	0,82/0,92	89,4/90,7	8,0/8,8	1,6/1,9	2,6/2,9	1,20	805
37/150	V.GMD 315 M 4/2b	1490/2980	68/252	237/481	0,84/0,92	91,4/91,7	6,5/8,2	1,6/1,9	2,5/2,8	1,40	870
8/4 pole, 750/1500 min-1 - CAST IRON HOUSING											
0,05/0,25	V.GMD 71 8/4a	680/1400	0,28/0,73	0,7/1,7	0,60/0,78	41,7/61,3	2,0/3,1	1,4/1,3	1,8/1,8	0,00040	8,9
0,065/0,33	V.GMD 71 8/4b	680/1400	0,36/1	0,9/2,3	0,58/0,76	43,6/61,3	2,0/3,2	1,4/1,4	1,8/1,9	0,00054	9,9
0,12/0,5	V.GMD 80 8/4a	680/1430	0,65/1,5	1,7/3,3	0,51/0,75	50,5/62,3	2,1/3,2	1,4/1,7	1,7/2,1	0,00083	12,8
0,18/0,75	V.GMD 80 8/4b	680/1405	0,90/2	2,5/5,1	0,54/0,81	51,5/65,3	2,1/3,5	1,6/1,7	1,8/2,1	0,0011	13,9
0,25/1	V.GMD 90 S 8/4	700/1410	1,2/2,8	3,4/6,8	0,51/0,69	57,4/73,2	2,7/4,6	1,6/2,1	2,1/2,4	0,0019	17,8
0,33/1,4	V.GMD 90 L 8/4	690/1390	1,3/3,3	4,6/9,6	0,60/0,79	59,4/76,2	2,6/4,3	1,7/1,8	1,9/2,1	0,0024	20,8
0,5/2	V.GMD 100 L 8/4a	700/1415	1,8/4,8	7/13	0,61/0,82	64,3/71,3	2,9/4,8	1,5/1,8	2,1/2,3	0,0038	27,8
0,6/2,5	V.GMD 100 L 8/4b	690/1410	2/5,5	8/17	0,66/0,86	64,3/74,3	3,2/5,2	1,5/1,9	2,0/2,3	0,0050	31
1/3,8	V.GMD 112 M 8/4	700/1425	3,2/8,3	14/25	0,63/0,83	70,2/78,3	3,4/5,2	1,4/2,0	2,0/2,5	0,0092	41
1,2/5	V.GMD 132 S 8/4	715/1450	3,8/10,5	16/33	0,60/0,84	74,2/80,3	3,7/5,4	2,1/2,2	2,4/2,6	0,019	51
1,7/7	V.GMD 132 M 8/4	710/1450	5,2/14,5	23/46	0,66/0,84	69,3/81,3	4,0/6,6	2,0/2,2	2,2/2,5	0,026	60
2,5/10	V.GMD 160 M 8/4	720/1460	7,4/20	33/65	0,64/0,87	74,3/81,4	3,7/6,4	1,8/2,3	2,2/3,0	0,054	105
3,5/14	V.GMD 160 L 8/4	720/1460	10,5/28	46/92	0,60/0,83	78,3/85,4	3,7/6,8	1,8/2,0	2,0/2,5	0,072	140
4/16	V.GMD 180 M 8/4	720/1465	11,4/32	53/104	0,63/0,82	79,3/86,4	3,8/6,0	1,8/2,3	1,8/2,4	0,11	150
5/20	V.GMD 180 L 8/4	720/1465	14/40	66/130	0,62/0,81	81,3/87,4	3,9/6,7	1,9/2,5	1,9/2,7	0,13	170
7/28	V.GMD 200 L 8/4	725/1465	16/51	92/183	0,73/0,88	84,2/88,4	4,5/6,6	1,9/2,1	1,9/2,4	0,19	235
8/32	V.GMD 225 S 8/4	730/1470	20/60	105/208	0,67/0,86	84,3/86,5	4,3/6,6	2,0/2,3	2,1/2,7	0,29	275
10/40	V.GMD 225 M 8/4	725/1470	26/71	132/260	0,65/0,92	84,4/89,5	4,0/6,3	1,8/2,3	1,8/2,4	0,35	320
12,5/48	V.GMD 250 M 8/4	735/1475	30/87	162/311	0,70/0,88	87,3/88,6	4,3/7,1	2,0/2,5	1,9/2,9	0,54	395
16,5/63	V.GMD 280 S 8/4	730/1475	38/115	216/408	0,70/0,88	88,4/90,6	3,8/6,3	1,6/2,2	1,8/2,4	0,90	550
21/83	V.GMD 280 M 8/4	735/1475	50/149	273/537	0,67/0,87	90,4/91,6	3,9/6,9	1,6/2,3	1,8/2,5	1,1	615
25/100	V.GMD 315 S 8/4	740/1480	53/174	323/643	0,74/0,89	90,4/92,6	4,7/6,9	1,7/2,2	1,8/2,4	1,6	702
30/8120	V.GMD 315 M 8/4a	740/1485	69/223	387/774	0,68/0,83	90,4/92,7	5,3/8,1	1,8/2,6	2,0/2,9	2,1	784
33/132	V.GMD 315 M 8/4b	740/1485	74/239	426/849	0,70/0,85	90,5/92,7	5,2/8,1	1,8/2,4	2,0/2,8	2,5	861

Efficiencies are calculated according to indirect method where the additional load losses are determined from exact measurements at different load points.

RATINGS AND PERFORMANCE

Two Speed Smoke Extraction Motors
Suitable for applications where torque rises with the square of speed
Two seperate windings Y/Y

F300 3-Phase, 400 V, 50 Hz
Duty type : S2+S1
Degree of protection : IP 55
Insulation class : H (180ºC)
Temp. Rise : B (80K)

Rated output	Type	Full-load data					Starting data		Breakdown torque ratio	Moment of inertia	Weight approx.
		Speed	Current I_N	Torque M_N	Power Factor Cos φ	Efficiency η %	Locked-rotor current-ratio I_A/I_N	Locked-rotor torque ratio M_A/M_N	M_K/M_N	J	B3
kW		min-1	A	Nm		IEC 60034-2-1:2007 4/4	D.O.L.	D.O.L.		kgm²	kg
6/4 pole, 1000/1500 min-1 - CAST IRON HOUSING											
0,05/0,18	V.GMD 71 6/4a	940/1340	0,34/0,72	0,51/1,28	0,42/0,56	48,5/63,2	2,0/2,1	1,4/1,3	1,9/1,6	0,00064	9,4
0,08/0,24	V.GMD 71 6/4b	940/1350	0,40/0,9	0,81/1,7	0,58/0,65	48,5/60,3	2,3/2,5	1,5/1,4	1,9/1,6	0,00086	10,3
0,15/0,45	V.GMD 80 6/4a	930/1370	0,54/1,3	1,54/3,14	0,77/0,81	50,5/60,4	3,2/3,2	1,7/1,4	2,1/1,5	0,0017	13,3
0,2/0,6	V.GMD 80 6/4b	960/1400	0,74/1,52	2,03/4,09	0,67/0,80	56,4/69,2	3,7/3,8	2,1/1,6	2,7/2,0	0,0022	14,7
0,3/0,9	V.GMD 90 S 6/4	940/1410	1,1/2,3	3,05/6,1	0,70/0,78	54,5/70,2	2,9/4,3	1,3/1,9	1,9/2,1	0,0019	17,8
0,37/1,1	V.GMD 90 L 6/4	935/1390	1,2/2,8	3,8/7,6	0,71/0,78	61,3/71,2	3,2/4,0	1,6/1,6	2,0/2,1	0,0024	20,8
0,6/1,6	V.GMD 100 L 6/4a	950/1420	1,85/4,1	6/10,8	0,73/0,79	62,4/69,3	3,6/5,2	1,6/2,1	2,2/2,3	0,0040	27,8
0,75/2,2	V.GMD 100 L 6/4b	950/1430	2,5/5,3	7,5/14,7	0,68/0,80	62,4/73,3	3,6/4,7	1,7/1,7	2,2/2,3	0,0052	31,3
1,1/3,3	V.GMD 112 M 6/4	955/1440	3,1/7,3	11/21,9	0,70/0,81	71,2/79,2	5,0/5,8	1,9/2,1	2,9/2,7	0,0092	41
1,5/4,5	V.GMD 132 S 6/4	940/1440	4,2/9,5	15,2/29,8	0,75/0,84	67,4/79,3	4,1/5,5	1,7/1,8	2,1/2,0	0,019	51
2/6,2	V.GMD 132 M 6/4	940/1440	5,2/13,3	20,3/41,1	0,77/0,86	70,3/76,4	4,0/5,2	1,7/2,0	1,9/2,2	0,026	60
3/9	V.GMD 160 M 6/4	945/1455	7/18	30,3/59,1	0,78/0,84	77,3/84,3	4,6/6,0	1,8/2,0	1,9/2,3	0,054	105
4/13	V.GMD 160 L 6/4	970/1455	9,5/26	39,4/85,3	0,75/0,84	79,3/84,4	4,0/5,5	1,9/2,1	1,9/2,2	0,072	140
5/15	V.GMD 180 M 6/4	970/1460	11,7/29	49/98	0,74/0,85	81,3/86,3	4,4/5,9	1,8/2,2	1,9/2,2	0,11	150
6/18,5	V.GMD 180 L 6/4	975/1455	14/36	59/121	0,75/0,85	80,3/85,4	5,4/5,5	2,4/2,1	2,5/2,3	0,13	170
7,5/25	V.GMD 200 L 6/4	980/1465	16,6/48	73/163	0,79/0,86	81,3/85,5	6,0/6,6	2,2/2,2	2,9/2,8	0,19	235
11/33	V.GMD 225 S 6/4	980/1470	25/67	107/214	0,73/0,80	85,3/87,5	5,0/6,4	1,8/2,1	2,2/2,8	0,29	275
14/40	V.GMD 225 M 6/4	980/1470	30/77	136/260	0,78/0,83	84,4/88,5	4,7/6,1	1,8/2,0	2,3/3,0	0,35	320
17/50	V.GMD 250 M 6/4	980/1474	36/92	166/324	0,80/0,85	83,4/90,5	5,2/7,2	2,0/2,5	2,4/3,1	0,54	395
22/65	V.GMD 280 S 6/4	985/1480	46/116	213/419	0,78/0,91	87,4/87,6	6,6/5,4	2,3/1,7	2,3/1,8	0,90	550
26/75	V.GMD 280 M 6/4	990/1480	56/137	251/484	0,75/0,89	87,4/87,6	6,8/5,5	2,5/1,6	2,5/1,7	1,1	615
32/95	V.GMD 315 S 6/4	990/1480	63/164	309/613	0,81/0,90	89,4/91,6	6,7/6,0	2,2/1,7	2,5/2,2	1,6	702
37/115	V.GMD 315 M 6/4a	990/1485	74/200	357/740	0,79/0,88	89,5/92,6	8,0/7,4	2,5/1,8	2,9/2,6	2,1	784
45/132	V.GMD 315 M 6/4b	990/1485	91/223	434/849	0,78/0,91	90,5/92,7	8,0/6,5	2,5/1,8	2,9/2,5	2,5	861

Efficiencies are calculated according to indirect method where the additional load losses are determined from exact measurements at different load points.

DIMENSIONS

TOTALLY ENCLOSED AIR-OVER COOLED (TEAO) MOTORS

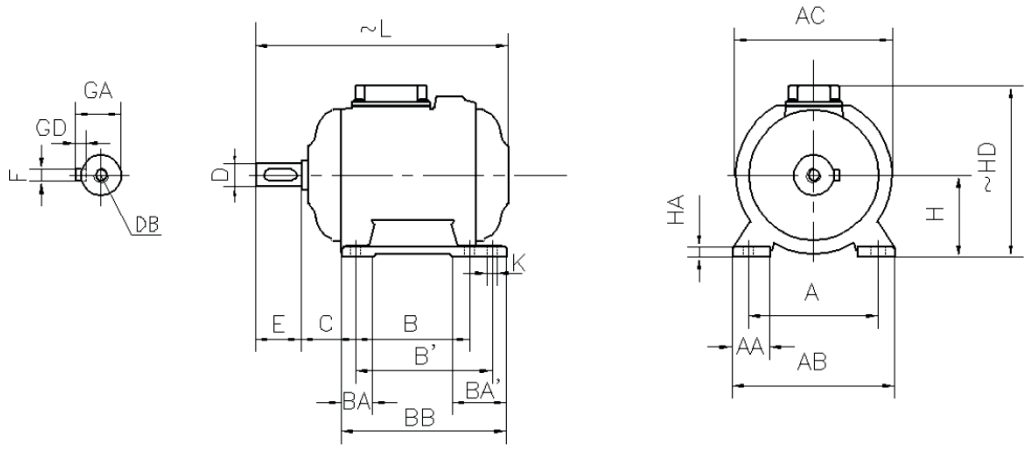

FOUT MOUNTED (B3) - CAST IRON HOUSING

Frame size		Number of pole	H	HD ~	HA	A	AA	AB	AC Ø	K Ø	B	B'	BA	BA'	BB	L ~	C	E	DB	D Ø	GA	FxGD
71		2-4-6-8	71	162	10	112	34	140	138	7	90	-	26,5	-	108	210	45	30	M5	14	16	5X5
80		2-4-6-8	80	177	12	125	40	160	152	10	100	-	30	-	125	237	50	40	M6	19	21,5	6X6
90	S	2-4-6-8	90	196	13	140	40	180	172	10	100	-	35	-	130	259	56	50	M8	24	27	8X7
	L	2-4-6-8									125				155	290						
		4 1)														310						
100	L	2-4-6-8	100	214	14	160	40	200	190	12	140	-	37,5	-	175	322	63	60	M10	28	31	8X7
		4 2)														349						
112	M	2-4-6-8	112	236	14	190	47,5	235	214	12	140	-	42,5	-	175	343,5	70	60	M10	28	31	8X7
		4 3)														362,5						
132	S	2-4-6-8	132	291	15	216	52	260	257	12	140	-	46	84	218	430	89	80	M12	38	41	10X8
	M										-	178										
160	M	2-4-6-8	160	377	21.5	254	60	312	310	15	210	-	62	-	260	527,5	108	110	M16	42	45	12X8
	L										254	-			304	571,5						
180	M	2-4-6-8	180	416	24	279	68	354	348	15	241	279	57	85	319	583,5	121	110	M16	48	51,5	14X9
	L										279	-	62	-	329	621,5						
200	L	2-4-6-8	200	455	26	318	80	398	390	19	305	-	68	-	355	669,5	133	110	M20	55	59	16X10
225	S	4-8	225	487	30	356	82	438	434	19	286	311	76	92,5	363	709	149	140	M20	60	64	18X11
	M	2									311	-		-	371	704		110		55	59	16X10
		4-6-8														734		140		60	64	18X11
250	M	2	250	505	35	406	80	484	480	24	349	-	75	-	410	814,5	168	140	M20	60	64	18X11
		4-6-8																		65	69	
280	S	2	280	563	40	457	120	550	544	24	368	-	85	128	474	872,5	190	140	M20	65	69	18X11
		4-6-8																		75	79,5	20X12
	M	2									-	419								65	69	18X11
		4-6-8																		75	79,5	20X12
315	S	2	315	656	50	508	125	620	614	28	406	-	115	166	550	1020	216	140	M20	65	69	18X11
		4-6-8														1050		170		85	90	22X14
	M	2									-	457				1020		140		65	69	18X11
		4-6-8														1050		170		85	90	22X14

All dimensions in mm

MARINE MOTORS

Marine motors are designed as per IEC 92-301 for use as main and auxiliary drives below deck on ships and in the offshore industry. The standard paint finish is suitable for indoor applications but in corrosive sea atmospheres, special paint finish is recommended. The standard version of IP55 degree of protection can be increased to IP65 on request.

The permitted temperature rise is lower than that of standard industrial motors ;

Related standard	Ambient Temperature (°C)	Temperature Rise Class B	Temperature Rise Class F
IEC 60034-1 Standard motors	40	80	105
IEC 92-301 Motors for marine applications	50	70	90

Marine motors manufactured as per IEC 92-301 standards are required to be tested in the presence of an inspector from the relevant classification authority if used in essential auxiliary devices depending on their output. Please consult GAMAK for more details.

Application ;

- Main propeller motor (in electric propulsion systems)
- Winches (anchor winches, warping winches, lifting gears)
- Fans and pumps
- Bow-thruster drives (in electric propulsion systems)

Electric Propulsion Systems :

The increasingly use of variable speed drives in electric motors, led diesel motor systems to be replaced with electric propulsion systems in ships. Main propeller and bow-thruster motors are driven via frequency converters and energy is supplied by generators.

The main advantages of the electric propulsion system is the silent running and energy savings with the frequency converter.

Main propeller motors run in completely enclosed areas having high ambient temperatures. This condition leads IP23 motors to be preferred for main drives. GAMAK marine motors are used as standard at electric propulsion ships where output power requirements are up to 1000 kW. Please consult GAMAK for higher power outputs.

SPECIAL APPLICATION MOTORS

Special application motors are specially designed to handle specific applications. Variants for applications other than given below are available on request.

Oil-immersed Motors :

Oil-immersed motors are 2 and 4 pole three-phase AC induction motors upto 5,5 kW and have protection class IP00 as standard. The main fields of application for low noise oil-immersed motors are hydraulic systems such as hydraulic car lifts or lifts in the automobile industry. Thanks to its compact design and direct mounting options, the motor offers a cost efficient and space saving solution. Oil-immersed motors offers higher output power compared to the same size standard motors since oil cools the oil-immersed motor constantly. The permissible oil temperature is 60°C.

Vacuum Pump Motors :

Vacuum pump motors are 4 pole single phase permanent split capacitor motors in frame size 90 having outputs of 0,55 and 0,75 kW. They are specially designed for direct coupling to milking machines vacuum pumps. The standard milking machine vacuum pump motors come with on/off switch located on the terminal box and a cable of 1,5m length lasting fitted with a plug.

In order to obtain maximum performance from a vacuum pump, it is very important to avoid expansion of motor shaft and offer a smooth flange surface. GAMAK vacuum pump motors fulfill these requirements.

Pump motors for pressure washers :

The motors supplied by GAMAK for the pumps of pressure washers are smooth running 4 and 5,5 kW three phase 4 pole motors. It has a special mounting flange and a hollowed shaft with special bearing arrangement.

Vibration motors for hollow block machines :

These vibration motors are specially designed for egg laying type hollow block machines, available in 2 pole and 1,5 kW output power. The vibration motor is driven via belt and pulley.

Air Conditioning Motors :

Custom design motors for driving fans at air conditioners.

Synchronous Reluctance Motors :

The so called “synchronous” reluctance motor uses stator windings similar to those used in squirrel cage induction motors. The rotor however needs salient poles to create a variable reluctance in the motor’s magnetic circuit which depends on the angular position of the rotor. The salient poles can be created by milling axial slots along the length of a squirrel cage rotor as shown at the adjacent diagram. The output power of such synchronous motor will be 80% that of squirrel cage induction motor.

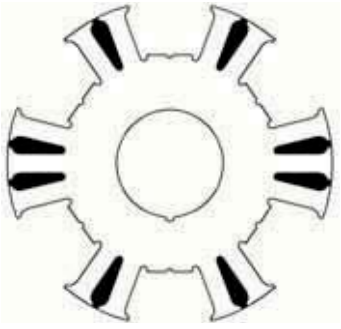

MISCELLANEOUS

	Page
• BELT PULLEYS	94
• EFFICIENCY AND POWER FACTOR	95
• INSTALLATION AND OPERATION	96...99
• MOTOR INQUIRY FORM	100

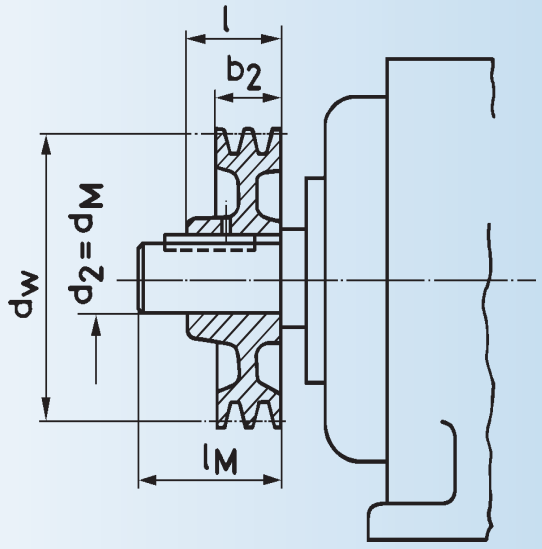

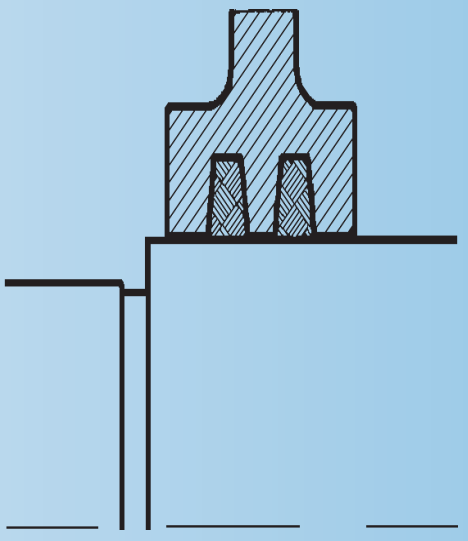

BELT PULLEYS

The correlation of grooved pulleys for narrow V-belts to electric motors (DIN 2211 T3).

The tabulated values are recommended for GAMAK motors.

The spare of belt pulleys may deviate from that shown in the drawings; dimensions are as given in the table.

Flat-belt pulleys

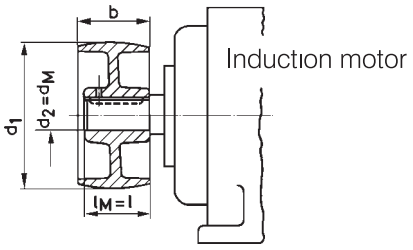

Grooved pulleys for narrow V-belts

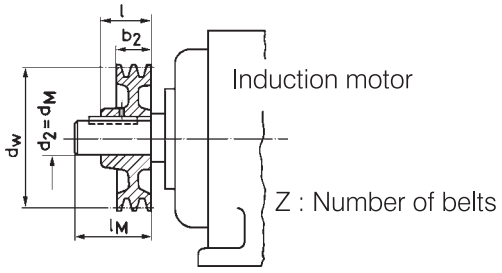

Plane side of the pulley should face the motor.

Flat belt pulleys DIN 111			3-Phase induction motor Output P_N in kW at 50 Hz Motor speed (rpm)						Grooved pulleys for narrow V-belts DIN 2211 T1				
d_1	b	l	3000	1500	1000	750	Frame size	Shaft extension $d_M \times l_M$	Profile	d_W	Z	b_2	l
50	25	23	0.18	0.12	-	-	63	11x23	-	-	-	-	-
			0.25	0.18	-	-							
63	32	30	0.37	0.25	-	-	71	14x30	-	-	-	-	-
			0.55	0.37	-	-							
80	40	40	0.75	0.55	0.37	-	80	19x40	-	63	1	16	28
			1.1	0.75	0.55	-							
100	50	50	1.5	1.1	0.75	-	90 S	14x50	SPZ	71	1	16	28
125	63		2.2	-	-	-	90 L			80			
			-	1.5	1.1	-				90			
160	80	60	3	-	-	0.75	100 L	28x60	SPZ	100	1	16	40
			-	2.2	1.5	1.1				112			
			-	3	-	-					2	28	
160	80	60	4	-	-	-	112 M	28x60	SPZ	125	1	16	40
			-	-	2.2	1.5				140			
			-	4	-	-					2	28	
200	100	80	5.5	-	-	-	132 S	38x30	SPZ	140	2	28	40
			7.5	5.5	3	2.2							
224			-	-	4	3	132 M						
			-	7.5	5.5	-					3	40	50
250	125	110	11	-	-	4	160 M	42x110	SPZ	160	3	40	50
			15	11	7.5	5.5							
			18.5	15	11	7.5	160 L			180	4	52	52
280	140	110	22	-	-	-	180 M	48x110	SPZ	180	4	52	52
			-	18.5	-	-			SPA			65	65
			-	22	15	11	180 L						
315	160	110	30	-	-	-	200 L	55x110	SPA	200	4	65	65
			37	-	-	-							
			-	30	18.5	15				250			
	200		-	-	22	-							
355	200	140	-	37	-	18.5	225 S	60x140	SPA	250	5	80	70
315		110	45	-	-	-	225 M	55x110			4	65	65
355		140	-	45	30	22		60x140	SPB	280		82	82
355	200	140	55	-	-	-	250 M	60x140	SPA	250	5	80	70
400			-	55	37	30		65x140	SPB	280		101	90
400	200	140	*75	-	-	-	280 S	65x140	-	-	-	-	-
450	224	140	-	75	45	37		75x140	SPB	315	6	120	100
400	200	140	*90	-	-	-	280 M	65x140	-	-	-	-	-
450	224	140	-	90	55	45		75x140	SPC	355	4	110.5	100
400	200	140	*110	-	-	-	315 S	65x140	-	-	-	-	-
500	250	170	-	110	75	55		85x170	SPC	355	5	136	110
400	200	140	*132	-	-	-	315 M	65x140	-	-	-	-	-
500	250	170	-	132	110	75		85x170	SPC	400	6	161.5	120

The hub length of flat-belt pulleys marked ◺ do not comply DIN 111.

All dimension in mm.

* No grooved pulleys for narrow V-belts are provided for these motors, due to their high circumferential speed.

EFFICIENCY AND POWER FACTOR

Efficiency (η) and power factors (Cos φ) given below are approximate values and should be used associated with performance ratings. Please consult GAMAK for exact values of a specific motor.

% Efficiency (η) at					Power factor (Cos φ) at				
1 / 4	1 / 2	3 / 4	**4 / 4**	5 / 4	1 / 4	1 / 2	3 / 4	**4 / 4**	5 / 4
92	94,5	96	**96**	95,5	0,70	0,86	0,91	**0,92**	0,93
90	93,5	95	**95**	94,5	0,65	0,84	0,90	**0,91**	0,92
89	92,5	94	**94**	93,5	0,63	0,83	0,89	**0,90**	0,91
88	91,5	93	**93**	92,5	0,61	0,80	0,88	**0,89**	0,90
87	91	92	**92**	91,5	0,57	0,78	0,86	**0,88**	0,89
86	90	91	**91**	90	0,53	0,76	0,85	**0,87**	0,87
85	89	90	**90**	89	0,51	0,75	0,84	**0,86**	0,86
84	88	89	**89**	88	0,49	0,73	0,83	**0,85**	0,86
80	87	88	**88**	87	0,47	0,71	0,81	**0,84**	0,85
79	86	87	**87**	86	0,45	0,69	0,80	**0,83**	0,84
78	85	86	**86**	85	0,43	0,67	0,79	**0,82**	0,83
76	84	85	**85**	83	0,41	0,66	0,77	**0,81**	0,82
74	83	84	**84**	82	0,40	0,65	0,76	**0,80**	0,81
72	82	83	**83**	81	0,38	0,63	0,75	**0,79**	0,80
70	81	82	**82**	80	0,36	0,61	0,74	**0,78**	0,80
68	80	81	**81**	79	0,34	0,59	0,72	**0,77**	0,79
66	79	80	**80**	78	0,32	0,58	0,71	**0,76**	0,78
64	77	79	**79**	77	0,30	0,56	0,69	**0,75**	0,78
62	75	78	**78**	76	0,29	0,55	0,68	**0,74**	0,77
60	74	77	**77**	75	0,28	0,54	0,67	**0,73**	0,76
58	73	76	**76**	74	0,27	0,52	0,63	**0,72**	0,76
56	72	75	**75**	73	0,26	0,50	0,62	**0,71**	0,76
55	71	74	**74**	72	0,25	0,49	0,61	**0,70**	0,75
54	70	73	**73**	71	0,24	0,48	0,59	**0,69**	0,74
53	68	72	**72**	70	0,23	0,47	0,58	**0,68**	0,74
52	67	71	**71**	69	0,23	0,46	0,57	**0,67**	0,73
51	66	70	**70**	68	0,22	0,45	0,56	**0,66**	0,72
50	65	69	**69**	67	0,22	0,44	0,55	**0,65**	0,71
49	64	68	**68**	66	0,22	0,43	0,54	**0,64**	0,70

INSTALLATION AND OPERATION

TRANSPORT

Individual Motors should only be lifted by the eye-bolt provided. The lifting gear used must have the carrying capacity of the motor weight (please refer to ratings and performance pages). When transporting a machine set with a base plate, do NOT lift the set by the eye-bolt provided on the motor. The eye-bolt on the base plate should be the ones used.

Motors with cylindrical roller bearings or angular contact ball bearings are protected against bearing damage during transport by means of a locking device which has to be removed before putting the motor into operation.

VENTILATION / COOLING

The cooling-fan is fixed onto the non-drive end of the motor shaft and ventilates the motor irrespective of rotation. The cooling-fans are injection mould high grade polyamide. The plastic fans have two integrally moulded tonques which engage with the circumferential groove of the shaft to provide axial fixing. Fans are positively fixed radially by means of key which is also integrally moulded.

To dismantle the fans, the tonques must be disengaged and held in the open position by means of inserted shim plates. Always use the appropriate tools for fitting or removing fans.

The distance between air intake and wall or other machinery must be at least $d^{\varnothing}/4$ of the air intake opening. The warm exhaust air leaving the motor must not be drawn in again. The air-inlet opening at the top of vertical motors should be protected by a canopy to prevent the ingress of water and foreign bodies (Check: Page 56 Part No.:82 Canopy).

The air openings of the fan-cover should be cleaned regularly (where necessary) by blowing oil-free compressed air outward away from the motor.

WATER DRAIN HOLES

The water drain holes, closed off with plugs when provided, must be at the lowest point of the enclosure depending on the type of construction and mounting arrangement of motor and kept clean.

When these plugs are removed, the degree of protection will be reduced nominally to IP 44.

RADIO INTERFERENCE AND SUPPRESSION

The motors meet the requirements of grade G to VDE 0875 which is sufficient for industrial applications. If, for use in residential areas, interference grades N (normal) or K (low) are specified, it is recommended to carry out interference measurements locally and to install adequate suppression equipment.

MOUNTING

The motors should always be mounted on a plane, vibration-free base. All motor feet must rest positively on their entire surface.

Temperatures up to and exceeding 100°C may arise under unfavourable operating conditions on the frame parts so that touching should be prevented or avoided. Temperature sensitive parts such as normal cables or electronic components should not be in contact with or mounted to these hot parts.

ALIGNMENT

Motors must always be accurately aligned, and this applies especially where they are directly coupled. Incorrect alignment can lead to bearing failure, vibration and even shaft fracture. As soon as bearing failure or vibration is detected, the alignment should be checked.

When the motor is coupled to the driven machine, the shafts must be aligned both radially and axially to each other by means of dial gauges. Measurements to be taken at 4 points displaced by 90° each while both coupling halves are turned simultaneously.

It is further recommended to re-check the alignement at the thermal equilibrium temperature of the machines.

TRANSMISSION COUPLINGS AND PULLEYS

The permissible mechanical forces given in the catalogue should not be exceeded when using Shaft Fitments which exert radial or axial shaft loads during operation. Flexible couplings only should be used as the rigid couplings will necessitate a special bearing design.

Shaft Fitments should be fitted and removed only by means of suitable devices. The bearings must by no means be subjected to any pressure or shock. Statistics show that some 70% of motor faults are due to bearing defects, and many of these can be traced back to mistreatment during the mounting of a coupling or pulley.

If a belt drive is used, install the motor on slide-rails to permit the correct belt tension to be adjusted. With belt drive, the shafts must be parallel, the pulleys must be in line and the lower part of the belt must be pulling.

Please refer to page 87 for selection of SLIDE-RAILS and BELT-PULLEYS.

BALANCING

Rotor assemblies dynamically balanced with HALF SHAFT KEY. Shaft Fitments must be balanced likewise to prevent undue vibration and adverse effects on bearing life.

The keys fitted to the shaft extension are held by plastic tape only to prevent them falling out during transportation or handling. The shaft key should be secured against flying out, when the motor is operated prior to the couplings etc... being fitted to the shaft extension.

INSULATION RESISTANCE

New or newly rewound motors normally have very good insulation resistance, but unfavourable transport, storage or standstill conditions may lower the insulation resistance to an undesirable low level due to dampness and/or dirt.

Before an electric motor is commissioned for the first time or after a long storage/standstill period, the insulation resistance of each phase to the earth should be measured with 500 Volt DC for 1 minute max. until the final resistance value is indicated.

During and immediately after measuring, the terminals must not be touched as they may carry residual dangerous voltages. Furthermore, if power cables are connected, make sure that the main supply is clearly disconnected. This applies both to the main and auxiliary circuits and particularly to the anti-condensation heating circuits.

Although the limit value for a minimum insulation resistance can not be stated, the following table may serve as a guide for measurement at a winding temperature of 25°C.

	Limit values at rated voltage < 2kV
Measuring voltage	500 V, DC
Min. insulation resistance of new, cleaned or repaired windings	10 MΩ
Critical specific insulation resistance after long periods of operation	0.5 MΩ/kV

Dry windings as new have insulation resistance values much higher than the above given limits of 10MΩ. If the insulation resistance value is around or below the minimum value, severe damp and/or dirt in the winding may be suspected. The motor must not be allowed to be operated until appropriate precautions are taken. The first step is to clean and dry the surfaces of the insulating parts, leads and board terminals. If the re-measured insulation resistance is still low, the windings are probably damp and they must be dried by applying heat which must not exceed 80°C and the temperature rise should not exceed 5K per hour during heating. Drying can be done by means of space or any other heater or by applying a low voltage of 5...10% of motor rated voltage and a current of 20...30% of motor rated current to the stator terminals U1 and V1 via an auto-transformer. The rotor must be removed when an AC is used. Always make sure that the ventilation is good enough to allow the moisture to be well dispersed. After the windings are cleaned/dried, the insulation resistance should only be measured when the winding is cooled down to room temperature of about 25°C as the insulation resistance of warm windings is lower.

COMMISSIONING

The following checks/tests should be performed after installation:

- Insulation and operating conditions comply with the name-plate data,
- Machine correctly installed and aligned,
- Shaft Fitments properly fitted,
- Insulation resistance to be satisfactory,
- Direction of rotation,
- Cooling air-flow not obstructed,
- Ensure rotor rotates freely,
- Ensure all fastening elements and electrical connections are tight,
- Earthing connections properly made,
- Proper lubrication of bearings,
- Additional attachments are fitted, properly connected, and serviceable,
- All protective precautions against contact with moving or live parts, are taken,
- Any built-on brake properly fitted connected and serviceable,
- Start up the motor at no-load until full speed is reached,
- Noises and vibrations at the bearings/endshields,
- Disconnect the motor if it does not run smoothly or any unusual noises are experienced. Determine the cause of defect as it decelerates, during which if the defect is eliminated, the cause will be of a magnetic or electrical nature. Otherwise, the cause is mechanical,
- Motors is loaded at its rated output, if it performs satisfactorily. Observe the running smoothness, and record the supply voltage as well as performance data of motor,
- The temperature of winding, bearing etc... until the thermal equilibrium is reached,
- The shut down the motor, switch-off the circuit breaker and let to come to rest without braking and switch-on the anti-condensation heater, if equipped.

To avoid any damage or injuiry, when the thermal protection system responds during the cooling down of the drive unit, temperature sensors should be connected and controlled in such a way that any unexpected automatic restarting of the motor is prevented.

The above check list cannot cover every possible eventuality or commissioning. Therefore, further measures may have to be taken by the installation/commissioning engineer that recognizes the particular plant/site conditions and associated supplementary instructions.

BEARINGS

Relubrication of Motors Equipped with Greasing Nipples

Initial, grease type of SHELL/GADUS S2 V100 C3 is used for lubrication during assembly of motors.

These motors are fitted with lubrication plate indicating the type of grease, quantity and lubricating interval.

The lubrication intervals given in the table below apply for normal continuous conditions i.e. operation at the rated load/speed, vibration free running, coupling operation, temperature of cooling medium 40°C and use of high grade rolling contact bearing greases of the following selection table.

K3K GREASES	K3N GREASES (Higher temp.)
BP/ENERGREASE LS3	SHELL/ALVANIA G3
MOBIL/MOBILUX 3	SHELL/GADUS S2 V100 C3
ARAL/ARALUB HL3	ARAL/ARALUB 4340
ELF/ROLEXA 3	ESSO/BEACON/3

The greasing intervals given below (Page 92) refer to a bearing temperature of 70°C. In case of increased thermal load e.g. belt drive, these intervals are reduced, and in case of reduced thermal load e.g. lower ambient temperature, they are extended. As an approach, the regreasing interval is halved or doubled respectively if the bearing temperature is increased or reduced by 15K.

However, irrespective of the operating hours, the grease should be changed after 3 years of operation at the latest due to ageing. For recharging with grease, the motor should be dismantled to the necessary extent, the bearings throughly cleaned or replaced and charged with new grease. Fill the hollow spaces of the bearings with new grease. Fill the hollow spaces of the bearings with grease, flush with the outside faces.

To avoid excessive grease in bearing assemblies, bearing caps should not be charged with grease.

The greases recommended, have lithium soap as thickener and mineral oil as the basic oil which contains oxidation and corrosion inhibitors. (Antifriction bearing greases K3N DIN 51 825),

The amount of grease to be filled in the bearing should be around 1/3 of its internal volume. Rule of thumb, the inner diameter of the bearing in mm corresponds to the minimum amount of grease to be used in gram.

In general, different brands/types of grease must not be mixed. Mixing grease with different type of thickeners may destroy its composition and physical properties. Even if the thickeners are of the same type, possible differences in the additive may cause detrimental effects.

To allow the new grease to be evenly distributed inside the bearing, the bearings need to be regreased whilst the motor is running. Initially the bearing temperature will rise significantly and then will drop to its normal value after the excess grease has been displaced from the bearing.

Relubrication intervals in operating hours of motors equipped with greasing nipples

No. of pole	Frame size			
	132-180	200-225	250-280	315-450
2	5.000	4.000	3.000	3.000
4	10.000	8.000	6.000	3.000
≥ 6	15.000	12.000	9.000	5.000

BEARING REPLACEMENT

Remove ball-bearings by means of an extraction device after slightly heating the inner ring. Never use a hammer. The inner ring of cylindrical roller bearings should be heated quickly by means of a torch and be levered-off by a screw driver. If after taking this action it still does not come off, grind a V-shaped groove into the inner ring and break it. Before installing the bearings, are in place before installation. Use extreme care and ensure clean conditions during installation and assembly. Heat the ball-bearings or the inner ring of the roller bearings in oil or air to a temperature of approx. 80°C and slip them onto the shaft. Heavy blows will damage the bearings and must definitely be avoided. Fill the bearings with the grease previously specified.

When installing single angular contact ball bearings, make sure that the broad shoulder of the inner ring and the narrow shoulder of the outer ring in operating position points at the direction opposite to that of the axial thrust.

Care must be taken during assembly to see that the sealing rings are fitted properly.

BEARING SEALS

Before new felt sealing rings are installed into the bearing caps, they must first be impregnated in 80°C hot high-viscosity lubricating oil to DIN 51 517-C100. The rings should be so dimensioned that shaft slides easily in, yet is also well enclosed by them.

V-ring dust seals and radial shaft seals (Oil-seals) are pushed into place by means of an appropriate assembly tool. Contact faces of both sealings should be slightly greased. The corrrect axial position of V-ring dust sealings has to be attained to prevent damage due to excessive friction.

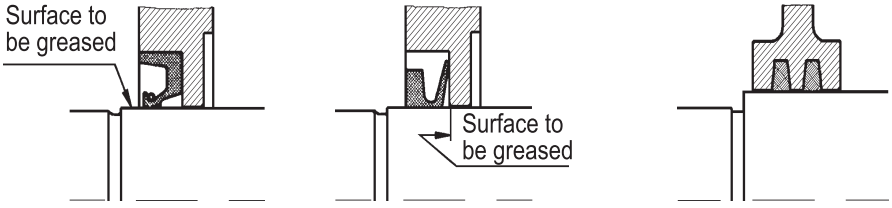

OIL-SEAL V-RING FELT SEALING

MOTOR INQUIRY FORM

Please fill in and send us the following form which will help us to select the correct motor for your application.

1. Supply Voltage (Phase to Phase) :.....V Frequency :.....Hz

2. Output :.....kW Power Required by the driven machine :.....kW

3. Speed :..... (min^{-1})
   3a. If two speed :..... / ..... (min^{-1})
   3a1. ☐ Dahlander Winding ☐ Two separate winding

4. Efficiency level : ☐ IE2 (high efficiency) ☐ IE3 (Premium efficiency)

5. Type of Construction :
   ☐ Foot Mounted
   ☐ Foot and Flange Mount. (Form A) B35
   ☐ Foot and Flange Mount. (Form C) B34
   ☐ Flange Mounted (Form A) B5
   ☐ Flange Mounted (Form C) B14

6. Mounting Arrangements :
   ☐ Vertical Mounting
   ☐ Horizontal Mounting
   ☐ Shaft extension downwards
   ☐ Shaft extension upwards

7. Degree of Protection : ☐ IP55 ☐ IP56 ☐ IP65 ☐ IP66 ☐ IP23

8. Insulation Class : ☐ F Class ☐ H Class

9. Ambient Temperature : ☐ < -30 °C ☐ -30 °C ≤ t ≤ +40 °C ☐ +40 °C ≤ t ≤ +50 °C
   ☐ +50 °C ≤ t ≤ +60 °C ☐ Other :.....

10. Humidity : ☐ < %80 ☐ %80 ≤ x ≤ %90 ☐ > %90

11. Altitude above sea-level : ☐ < 1000m ☐ 2000m ☐ 3000m ☐ 4000m ☐ Other :.....m

12. Duty Type :..... (Please See Pages 19-20)

13. Starting Method :
   ☐ Direct On-line
   ☐ Soft Starting
   ☐ Star Delta
   ☐ Via Frequency Converter

   13a. Please define duty cycle if the motor is driven via F.C. :.....

14. Mechanical Braking : ☐ None ☐ Standard Brake ☐ Low Torque Brake

15. Transmission : ☐ Direct Coupling ☐ Belt Pulley ☐ Gear box

16. Thermal Protection : ☐ Thermistor ☐ Thermostat ☐ Heaters

17. Type of Load :
   ☐ Variable torque: Torque rises with the square of speed and output rises with the cubic of speed (like fans and pumps)
   ☐ Constant Torque: Torque is constant throughout the speed range and output changes in proportion to speed (like compressors, conveyors, machine tools)
   ☐ Other:.....

18. Miscellaneous : .....
   .....
   .....

19. Quantity : .....

20. Company details (Contact details of related person) : .....
   .....
   .....
   .....
   .....

INDEX A - I

A
AC Braking 83
Alignment 96
Axial Load 13,14

B
Balancing 15
Balancing - Installation and operation 97
Ball bearings - standard motors 10
Bearings 10
Bearing replacement 99
Bearing Seals 99
Bearings - standard motors 10,11
Belt Pulleys 94
Brake motors - Standard type 83
Brake motors - Low torque braking 84

C
Cable entry 9
Cable glands 9
Canopy 8,53
Capacitor start + Capacitor run motors 71,76
Commissioning 98
Constant torque applications 34
Construction Types 16
Cooling - Standard motors 9
Cylindrical roller bearings - standard motors 11

D
Dahlander wound motors 34
DC braking 83
Degrees of Protection 8
Disc spring 53
Duty Types 19,20

E
Efficiency 24,95
Efficiency Regulations 24
Electric propulsion systems 91
Electronic start relay 71
Emergency duty - smoke extraction motors 85
Encoder integration 67

F
Fan motors - Shaded Pole Motors 80
Flat-belt pulleys 84
Forced ventilation 67,68
Frequency converter 66
Frequency - Standard motors 17

G
Greases - Installation and Operation 98,99
Greasing nipples 98
Grooved pulleys for narrow V-belts 94

H
Heaters 9
Helical compression spring 10,53

I
Insulated bearing 68
Insulation class 18
Insulation resistance 97
Inquiry Form 100
Inverter duty - over rated speed 68
Inverted duty - under rated speed 67

INDEX K - Z

L
Limit speeds 69

M
Main propeller motors - marine motors 91
Marine applications 91
Marine motors 91
Mechanical design - single phase motors 72
Mechanical design - standard motors 8
Mounting arrangements 16
Mounting - Installation and operation 96
Multi speed motors 34

N
Noise level 15
No-load running - single phase motors 74

O
Oil - immersed motors 92
Oil - Seal 99
Output 18

P
Painting - single phase motors 72
Painting - Standard motors 15
Permanent split capacitor motors 71,75
Power Factor 95
Product code 5
Pump motors for pressure washers 92

R
Radial forces 11,12
Radio interference 96
Relubrication of motors 98

S
Shaft extension 15
Shaft voltages 66,69
Smoke extraction motors 85
Soft starting 23
Standard and Recommendations 7
Starting frequency 21
Starting time 22
Storage 15
Synchronous Reluctance motors 92

T
Terminal box - standard motors 9
Thermistor 23
Thermostat 23
Tolerances 23
Torque 18
Transmission couplings 97
Transport - Installation and operation 96
Two separate winding 34

V-W
Vacuum pump motors 92
Variable torque - applications 34
Ventilation - Cooling 96
Vibration 15
Vibration motors for hollow block machines 92
Water drain holes 96
Wire enamelling 18